Repubblica di San Marino

Autorità per l'Omologazione

Republic of San Marino

Authority for Homologation

Via Consiglio dei Sessanta, 99
47891 Dogana - Repubblica di San Marino

Comunicazione
Communication

E57	Concernente [2/] *Concerning [2/]*	~~Il rilascio dell'omologazione~~ ~~*Approval granted*~~ **L'estensione dell'omologazione** ***Approval extended*** ~~Il rifiuto dell'omologazione~~ ~~*Approval refused*~~ ~~La revoca dell'omologazione~~ ~~*Approval withdrawn*~~ ~~La cessazione definitiva della produzione~~ ~~*Production definitively discontinued*~~

of a type of: lateral protection device (LPD) pursuant to Part II of Regulation No. 73.

Omologazione N. ***Approval No.***	**E57*73R01/02*0010**	**Estensione N.** ***Extension No.***	**01**

Marchio di omologazione ***Approval mark***	E57 **73R - 010010**

1.	Denominazione commerciale o marchio dell'LPD: *Trade name or mark of vehicle:*	LAGO ACCESSORI
2.	Tipo di LPD: *Type of LPD:*	TOOLBOX
3.	Nome e indirizzo del fabbricante: *Name and address of manufacturer:*	**LAGO Accessori SRL** Via 1 Maggio 20 31014 FONTANIVA (PD) - ITALY
4.	Se applicabile, nome e indirizzo del mandatario del fabbricante *If applicable, name and address of the manufacturer's representative:*	Not Applicable

5.	Caratteristiche dell'LPD (dimensioni e elementi di fissaggio): *Characteristics of the LPD (dimensions and its links):*	See Manufacturer's Information Document Toolbox DT_MT
6.	Prova effettuata: *Test conducted:*	~~su un banco rigido/~~su un veicolo~~/su elementi rappresentativi del veicolo~~[2]~~:~~ *~~on a rigid bench/~~on a vehicle~~/on a representative part of the vehicle~~[2]:*
7.	Posizione dei punti di applicazione delle forze di prova sull'LPD: *Position on the LPD of the points of application of the test forces:*	Le forze di prova sono state applicate al centro e al bordo esterno del coperchio della cassetta degli attrezzi *The test forces were applied to the center and the outer edge of the tool box*
8.	Categoria di veicolo sulla quale può essere montato l'LPD: *Vehicle category on which the LPD may be installed:*	N2, N3, O3, O4
9.	Dispositivo presentato all'omologazione il: *Device submitted for approval on:*	27/08/2020 e/*and* 15/03/2022
10.	Servizio Tecnico responsabile delle prove di omologazione: *Technical service responsible for conducting approval tests:*	**AUTOMOTIVE TECHNICAL SERVICE S.r.l.** Via Consiglio dei Sessanta, 99 47891 – DOGANA Repubblica di San Marino
11.	Data del verbale rilasciato da tale servizio: *Date of report issued by that service:*	28/08/2020 e/*and* 04/04/2022
12.	Numero di verbale rilasciato da tale servizio: *Number of report issued by that service:*	ATS-73-2086 e/*and* ATS-SM-IR-73-03696
13.	L'omologazione è: *Approval is:*	~~RILASCIATA/RIFIUTATA~~/**ESTESA**/~~REVOCATA~~[2] ~~*GRANTED/REFUSED*~~/***EXTENDED***/~~*WITHDRAWN*~~[2]
14.	Posizione del marchio di omologazione sull'LPD: *Position of approval mark on the LPD:*	Sul coperchio del dispositivo *On the lid of the device*
15.	Luogo: *Place:*	DOGANA – Repubblica di San Marino
16.	Data: *Date:*	07/04/2022
17.	Firma: *Signature:*	AUTORITÀ PER L'OMOLOGAZIONE E57 Repubblica di San Marino Ing. Marco CONTI Direttore Generale General Director

18. I seguenti documenti che riportano il numero di omologazione sopracitato, sono disponibili su richiesta
The following documents, bearing the approval number shown above, are available upon request.

(2) Cancellare la dicitura inutile.
Strike out which does not apply.

Allegato *Enclosure*				
Al certificato di omologazione ECE N. *To ECE approval certificate No.*		**E57*73R01/02*0010*01**		
Indice del fascicolo di omologazione *Index to the information package*				
Data *Date of issue*	31/08/2020		**Data ultima modifica** *Last amendment date*	07/04/2022
1.	**Clausole di garanzia e istruzioni sul diritto di presentare ricorso** *Collateral clauses and instruction on right to appeal*			
2.	**Rapporto(i) Finale di Ispezione N.** *Test report(s) No.*	**ATS-SM-IR-73-03696**	**Data** *Date*	04/04/2022
3.	**Scheda informativa N.** *Information document No.*	**Toolbox DT_MT**	**Data** *Date*	18/02/2020
			Data ultima modifica *Last amendment date*	**15/03/2022**

Clausole di garanzia e istruzioni sul diritto di presentare ricorso

Clausole di garanzia

La produzione in serie deve essere esattamente conforme ai documenti di omologazione. Le variazioni di produzione in serie sono consentite solo con il consenso espresso del **Autorità per l'Omologazione**.

Le variazioni del nome della società, l'indirizzo e lo stabilimento di produzione, nonché una delle parti che hanno l'autorità alla consegna o eventuali rappresentanti nominati al momento del rilascio dell'omologazione, devono essere immediatamente comunicate al **Autorità per l'Omologazione**. La violazione di queste regole può portare al ritiro dell'omologazione ed inoltre può essere legalmente perseguita.

L'omologazione decade se viene restituita o ritirata o se il tipo omologato non è più conforme ai requisiti di legge. La revoca può essere fatta se non esistono più i requisiti richiesti per il rilascio e la continuazione dell'omologazione, se il titolare dell'omologazione viola gli obblighi dettati dall'omologazione, anche nel caso in cui gli obblighi derivino dalle condizioni assegnate all'interno dell'omologazione, o se è accertato che il tipo approvato non è conforme ai requisiti di sicurezza del traffico e di tutela dell'ambiente.

L'**Autorità per l'Omologazione** può verificare la corretta applicazione della delega conferita rilasciata nella presente omologazione, in qualsiasi momento. In particolare, questo include la verifica della produzione, che sia conforme, nonché le misure di controllo di conformità della produzione. Per questo, possono essere presi dei campioni dalla produzione. I dipendenti o rappresentanti dell'**Autorità per l'Omologazione** possono avere accesso senza ostacoli agli impianti di produzione e stoccaggio.

La delega conferita contenuta nella presente omologazione non è trasferibile. I diritti del marchio di terzi non sono interessati da questa omologazione.

Istruzione su diritto di ricorso

Questa omologazione è appellabile entro un mese dalla notifica. Il ricorso deve essere presentato per iscritto o come una domanda inviata all' **Autorità per l'Omologazione** - Via Consiglio dei Sessanta, 99 - 47891 Dogana - Repubblica di San Marino

********** **********

Collateral clauses and instruction on right to appeal

Collateral clauses

*The individual production of serial fabrication must be in exact accordance with the approval documents. Changes in the individual production are only allowed with express consent of the **Authority for Homologation**.*

*Changes in the name of the company, the address and the manufacturing plant as well as one of the parties given the authority to delivery or authorized representative named when the approval was granted is to be immediately disclosed to the **Authority for Homologation**. Breach of this regulation can lead to recall of the approval and moreover can be legally prosecuted.*

The approval expires if it is returned or withdrawn or if the type approved no longer complies with the legal requirements. The revocation can be made if the demanded requirements for issuance and the continuance of the approval no longer exist, if the holder of the approval violates the duties involved in the approval, also to the extent that they result from the assigned conditions to this approval, or if it is determined that the approved type does not comply with the requirements of traffic safety or environmental protection.

*The **Authority for Homologation** may check the proper exercise of the conferred authority taken from this approval at any time. In particular this means the compliant production as well as the measures for conformity of production. For this purpose samples can be taken or have taken. The employees or the representatives of the **Authority for Homologation** may get unhindered access to the production and storage facilities.*

The conferred authority contained with issuance of this approval is not transferable. Trade mark rights of third parties are not affected with this approval.

Instruction on right to appeal

*This approval can be appealed within one month after notification. The appeal is to be filed in writing or as a transcript at the **Authority for Homologation** - Via Consiglio dei Sessanta, 99 - 47891 Dogana - Repubblica di San Marino*

Rapporto Finale di Ispezione
Inspection Report

N./*No*. ATS-SM-IR-73-03696
Rel. 00

Ispezione relativa a ~~veicoli/~~componenti per quanto riguarda:
Inspection concerning ~~vehicles~~/components with regard to:

Disposizioni uniformi relative all'approvazione di
Uniform provisions concerning the approval of

II. Dispositivi di protezione laterale (LPD)
II. Lateral Protection Devices (LPD)

svolta in accordo al
performed according to

Regolamento ECE N. 73
Part II

all'ultima serie di emendamenti
as last amended by

Serie di modifiche 01
01 series of amendments

della Commissione Economica per l'Europa
of the Economic Commission for Europe

Stato di Omologazione/ *Approval status*	
ECE	**Numero di Omologazione/ *Number of approval***
	E57*73R01/02*0010*01

0.	**Informazioni Generali** *General information*	
0.1.	Marchio (denominazione commerciale del costruttore): *Make (trade name of manufacturer):*	LAGO ACCESSORI
0.2.	Tipo: *Type:*	TOOLBOX
0.2.1.	Varianti: Variants:	DAY TRIPPIN' 400, DAY TRIPPIN' 500, DAY TRIPPIN' 600, DAY TRIPPIN' 700, DAY TRIPPIN' 800, DAY TRIPPIN' 1000, **ORIGIN 400, ORIGIN 500** **ORIGIN 600, ORIGIN 700** **ORIGIN 800, ORIGIN 1000** MOTHER TRUCKER 400, MOTHER TRUCKER 500 MOTHER TRUCKER 600,MOTHER TRUCKER 700 MOTHER TRUCKER 800,MOTHER TRUCKER 1000
0.3.	Mezzi di identificazione del tipo, se contrassegnati sul veicolo: *Means of identification of type, if marked on the vehicle:*	N/A
0.3.1.	Posizione di tale marcatura: *Location of that marking:*	N/A
0.4.	Posizione del marchio di Omologazione: *Position of the approval mark:*	Sul dispositivo *On the device*
0.5.	Categoria del Veicolo: *Vehicle category:*	N2, N3, O3, O4
0.6.	Nome e indirizzo del costruttore: *Name and address of manufacturer:*	**LAGO Accessori SRL** Via 1 Maggio 20 31014 FONTANIVA (PD) – ITALY
0.6.1.	Sede Operativa: *Production plant(s) address(es):*	Via 1 Maggio 20 31014 FONTANIVA (PD) – ITALY
0.6.2.	Nome e indirizzo del rappresentante del costruttore: *Name and address of manufacturer's authorized representative:*	N/A
0.7.	Scheda Informativa N. : *No. of the information document:*	Toolbox DT_MT — Data: *Date* 15/03/2022

1. Oggetto del test
Test Object

Non applicabile per questa estensione
Not Applicable for this extension level

1.1. Peggior scenario rappresentativo:
Worst Case Selection:

Il costruttore ha aggiunto nuove versioni del dispositivo. Le versioni aggiunte non modificano la geometria del dispositivo. I risultati dei test condotti rimangono validi. Non sono richiesti test aggiuntivi.
Il dispositivo continua a soddisfare le prescrizioni del Regolamento UN/ECE N.73, emendamento 01.

The manufacturer has added new versions of the device. The added versions do not change the geometry of the device.
The test results carried our remain valid. No additional tests are required.
The device continues to satisfy the requirements of the UN / ECE Regulation No. 73, amendment 01.

1.2. Componente verificato:
Test component:

Non applicabile per questa estensione
Not Applicable for this extension level

Costruttore:
Make:

N/A

Specifiche del componente:
Component Specifications:

N/A

1.3. Osservazioni:
Remarks:

Vedere punto 1.1 del presente Report

2. **Generalità del Test**
Test records

Non applicabile per questa estensione
Not Applicable for this extension level

2.1. **Condizioni del Test**
Test Conditions

Non applicabile per questa estensione
Not Applicable for this extension level

2.1.1. Parametri dell'area del Test : N/A
Parameter of the test area

2.1.2. Attrezzature per misurazioni e Test : N/A
Equipment for measuring and testing

Attrezzatura *Equipment*	Numero di serie o numero di certificato *Serial or Certificate No.*	Scadenza della Calibrazione *Calibration due*
N/A	N/A	N/A

3	Risultati del Test *Test Results*	Non applicabile per questa estensione *Not Applicable for this extension level*
3.1	Test di resistenza statico *Applied Force Test*	N/A
3.2	Calcoli di resistenza *Strength calculations*	N/A

4. Informazioni ulteriori
Other information

Luogo dell'ispezione *Place of inspection:*	N/A Controllo documentale / *Documental check*
Data dell'ispezione *Date of inspection:*	04/04/2022

Rappresentante(i) del Servizio Tecnico: *Technical service representative(s)*	**Ispettore** ***Inspector***	**Ispettore Junior(se applicabile)** ***Junior Inspector (if applicable)***
	Eng. Gabriele Zivelonghi	N/A

Rappresentante del produttore *Manufacturer's representative*	N/A
Osservazioni *Remarks:*	**None**

4.1 Appendice
Appendix

1. Lista delle modifiche
List of modifications

4.2 Allegato
Enclosures

Documento informativo *Information Folder*	Toolbox DT_MT

5. Dichiarazione di conformità
Statement of conformity

La scheda Informativa, di cui al paragrafo 0.7, e il Tipo descritto sono conformi alle specifiche di prova sopra menzionate.
The information document as given in paragraph 0.7 and the type described there are in compliance with the test specification mentioned above.
Per quanto riguarda il livello richiesto di prestazione da raggiungere, gli articoli testati erano rappresentativi del Tipo da omologare (vedere paragrafo 1).
With regard to the required level of performance to be achieved, the tested items were representative for the type to be approved (see paragraph 1).

Le prove sono state eseguite in conformità ai requisiti pertinenti di EN ISO / IEC 17025 e EN ISO / IEC 17020 / R73-01 ECE / UN.
The tests were carried out in accordance with the relevant requirements of EN ISO/IEC 17025and EN ISO/IEC 17020 / R73-01 *ECE/UN.*

Il rapporto di prova comprende pagine da 1 a8.
The test report comprises pages 1 to 8.

Il documento non deve essere riprodotto, se non per intero, senza l'approvazione scritta del laboratorio.
Il shall not be reproduced except in full, without written approval of the laboratory.

Dogana, Repubblica di San Marino, 04/04/2022

Number of project and protocol	***Originality Check*** (*) **ATS-SM-PR-03696**	**Automotive Technical Service S.r.l.** ***Inspector*** (Eng. Gabriele Zivelonghi) **Automotive Technical Service S.r.l.** ***Technical Director*** (Eng. Bogdan Domnescu)	AUTOMOTIVE TECHNICAL SERVICE S.r.l. · Via Consiglio dei Sessanta, 99 · 47891 RSM ATS Technical Service RSMAO-01

(*) To check the originality of documents, scan the QR Code or connect to the site https://www.ats.sm/originality-control-atp-adr-tyapp/ and follow the instruction in it.

Appendix 1

Lista delle modifiche ***List of modifications***	**Applicabile / Non applicabile** ***Applicable / ~~Not Applicable~~***	**Appendice 1** ***Appendix 1***

Maggiori dettagli della domanda di:
More details for application of

Estensione dell'omologazione
Approval Extension

Data : **15/03/2022**
Date

Correzione di *Correction of*	:	--
Modifica di *Modification of*	:	--
Aggiunta di *Addition of*	:	Nuove varianti di chiusura coperchio cassa *New variants of the closing of the box*
Eliminazione di *Deletion of*	:	--

APPLICATION FOR EXTENSION PURSUANT TO ECE REGULATION N° 73.01 WITH REGARDS TO THE LATERAL PROTECTION DEVICES

FOR THE LATERAL PROTECTION DEVICE
BRAND (TRADE NAME): LAGO ACCESSORI
TYPE: TOOLBOXES
REASON FOR EXTENSION: ADDITION OF VARIANTS

DOMANDA DI ESTENSIONE AI SENSI DEL REGOLAMENTO ECE N° 73.01 RIGUARDANTE I DISPOSITIVI DI PROTEZIONE LATERALE

PER LA PROTEZIONE LATERALE DEI DISPOSITIVI
MARCA: LAGO ACCESSORI
TIPO: CASSETTE PORTA ATTREZZI
MOTIVO DELL'ESTENSIONE: AGGIUNTA DI VARIANTI

DEMANDE DE EXTENSION CONFORMEMENT AU REGLEMENT DE LA ECE N° 73.01 CE QUI CONCERNE LES DISPOSITIFS DE PROTECTION LATERALE

POUR LE DISPOSITIF DE PROTECTION LATERALE
MARQUE: LAGO ACCESSORI
TYPE: COFFRE D'OUTIL
RAISON DE L'EXTENSION : AJOUT DE VARIANTES

LAGO ACCESSORI SRL
Via 1° Maggio, 20
35014 FONTANIVA (PD)
C.F. e P.I. 03476310283

LAGO ACCESSORI SRL
Via 1° Maggio, 20
Tel. 049 5940932 Fax 049 5940599
35014 FONTANIVA (PD)
C.F. e P. IVA: 03476310283

Fabio Lago / President

LAGO Via 1° Maggio, 20 35014 Fontaniva (Padova) - ITALY www.lagoaccessori.net	**INFORMATION FOLDER** Toolbox DT_MT **SCHEDA INFORMATIVA** Toolbox DT_MT **DOSSIER DESCRIPTIF** Toolbox DT_MT LAGO ACCESSORI SRL / 15.03.2022

CONTENT

Total number of pages 38
Number of descriptive pages 07
Drawings 28

INDICE DEL FASCICOLO

Numero totale di pagine 38
Numero di pagine descrittive 07
Disegni 28

SOMMAIRE

Nombre totale de pages du dossier 38
Numbre de pages du descriptif 07
Nombre de pages de schemas et photos 28

CONFIRMATION

HEREBY WE DECLARE THAT THE SPECIMEN OF THE LATERAL PROTECTION DEVICE SUBMITTED FOR THIS APPROVAL TEST HAS BEEN MANIFACTURED AND ASSEMBLED ON CONDITIONS OF ORDINARY MASS PRODTCTION AND THAT IT IS COMPATIBLE WITH ENCLOSED DOCUMENTATION

CONFERMA

CON LA PRESENTE SI AFFERMA CHE IL CAMPIONE DI DISPOSITIVO DI PROTEZIONE LATERALE SOTTOPOSTO A QUESTO TEST DI APPROVAZIOMNE È STATO COSTRUITO E ASSEMBLATO IN CONDIZIONI DI ORDINARIA PRODUZIONE DI SERIE E CHE È COMPATIBILE ALLA DOCUMENTAZIONE ALLEGATA

CONFIRMATION

PAR LES PRESENTES NOUS DECLARONS QUE LE SPECIMEN DE LA DISPOSITIF DE PROTECTION LATERALE DEPOSE POUR CE APPROBATION TEST A ETE FABRIQUE ET ASSEMBLE SUR LES CONDITIONS DE PRODUCTION DE MASSE ORDINAIRE ET QUE IL EST COMPATIBLE AVEC DOCUMENTATION JOINTE

LAGO ACCESSORI SRL
Via 1° Maggio, 20
35014 FONTANIVA (PD)
C.F. e P. IVA: 03476310283

LAGO ACCESSORI SRL
Via 1° Maggio, 20
Tel. 049 5940932 Fax 049 5940599
35014 FONTANIVA (PD)
C.F. e P. IVA: 03476310283

Fabio Lago / President

LAGO Via 1° Maggio, 20 35014 Fontaniva (Padova) - ITALY www.lagoaccessori.net	**INFORMATION FOLDER** Toolbox DT_MT **SCHEDA INFORMATIVA** Toolbox DT_MT **DOSSIER DESCRIPTIF** Toolbox DT_MT LAGO ACCESSORI SRL / 15.03.2022

DESCRIPTION OF THE LATERAL PROTECTION ACCORDING TO THE REGULATION ECE 73.01
DESCRIZIONE DELLA PROTEZIONE LATERALE CONFORME AL REGOLAMENTO ECE 73.01
DESCRIPTION DE LA PROTECTION LATERALE CONFORMEMENT A LE REGLEMENT ECE 73.01

0	**GENERALS** **DATI GENERALI** **GENERALITES**	
0.1	BRAND (TRADE NAME OF THE MANIFACTURER) MARCA (DENOMINAZIONE COMMERCIALE DEL COSTRUTTORE) MARQUE (RAISON SOCIALE DU CONSTRUCTEUR)	**LAGO ACCESSORI**
0.2	TYPE TIPO TYPE	**TOOLBOX**
0.4	CATEGORY CATEGORIA CATEGORIE	**N2 - N3 – O3 - O4** (1)
0.5	MANIFACTURER'S NAME AND ADDRESS DENOMINAZIONE ED INDIRIZZO DEL COSTRUTTORE NOME AT ADRESSE DU CONSTRUCTEUR	**LAGO ACCESSORI SRL** **VIA 1° MAGGIO, 20** **35014 FONTANIVA (PD) - ITALY**
0.6	IDENTIFICATION OF THE COMPONENT IDENTIFICAZIONE DEL DISPOSITIVO IDENTIFICATION DU DISPOSITIF	**ON THE COMPONENT, EITHER BY A SELF-STICK LABEL OR A PERMANENT MARKING** **SUL DISPOSITIVO, CON ETICHETTA ADESIVA O ALTERNATIVAMENTE CON MARCHIATURA PERMANENTE** **SUR LE DISPOSITIF, SOIT PAR UNE ETIQUETTE ADHESIVE OU SOIT PAR UN MARQUAGE PERMAENT**
0.8	ADDRESS(ES) OF ASSEMBLY PLANT(S) INDIRIZZO/I STABILIMENTO/I DI MONTAGGIO ADRESSE DES ATELIERS DE MONTAGE	**LAGO ACCESSORI SRL** **VIA 1° MAGGIO, 20** **35014 FONTANIVA (PD) – ITALY**

Position of identification	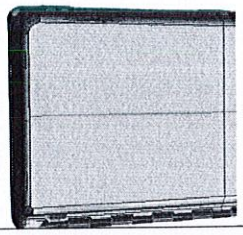		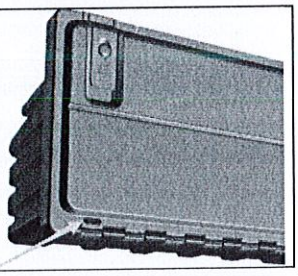

9 **BODY**
CARROZZERIA
CARROSSERIE

9.1 TYPE OF BODYWORK
TIPO DI CARROZZERIA
TYPE DE CARROSSERIE

BA - BB - BD - DA - DB - DC (1)

9.19 LATERAL PROTECTION
PROTEZIONE LATERALE
PROTECTION LATERALE

9.19.2 IN THE CASE OF LATERAL PROTECTION DEVICE(S) FULL DESCRIPTION AND/OR DRAWINGS OF SUCH DEVICE(S) – INCLUDING MOUNTINGS AND FITTINGS
SE ESISTE UNO O PIU DISPOSITIVI DI PROTEZIONE LATERALE, DESCRIZIONI COMPLETE E/O DISEGNI DI TALE/I DISPOSITIVO/I – CON GLI ELEMENTI DI MONTAGGIO E FISSAGGIO
SI LE VEHICULE EST PORVU D'UN OU PLUSIEURS DISPOSITIF(S) DE PROTECTION LATERALE DESCRIPTION COMPLETE ET/OU DESSIN DE CE(S) DISPOSITIF(S) – COMPRIS LES FIXATIONS ET LE SUPPORT

SIDE MEMBER / LONGHERONE / LONGERON
DESCRIPTION TYPES MATERIALS REFERENCES
DESCRIZIONE TIPO MATERIALE RIFERIMENTO
DESCRIPTION TYPE MATERIEL REFERENCE

RANGE / GAMME / GAMME DAY TRIPPIN'

446060116	DAY TRIPPIN' 400	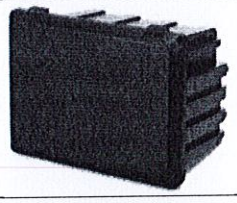
446060100	DAY TRIPPIN' 500	
446060090	DAY TRIPPIN' 600	
446060045	DAY TRIPPIN' 700	
446060030	DAY TRIPPIN' 800	
446060020	DAY TRIPPIN' 1000	

RANGE / GAMMA / GAMME ORIGIN

446064116	**ORIGIN 400**	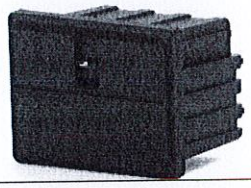
446064100	**ORIGIN 500**	
446064090	**ORIGIN 600**	
446064045	**ORIGIN 700**	
446064030	**ORIGIN 800**	
446064020	**ORIGIN 1000**	

RANGE / GAMMA / GAMME MOTHE TRUCKER

446062116	MOTHER TRUCKER 400	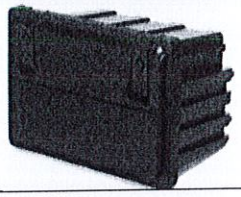
446062100	MOTHER TRUCKER 500	
446062090	MOTHER TRUCKER 600	
446062045	MOTHER TRUCKER 700	
446062030	MOTHER TRUCKER 800	
446062020	MOTHER TRUCKER 1000	

LAGO
Via 1° Maggio, 20
35014 Fontaniva (Padova) - ITALY
www.lagoaccessori.net

INFORMATION FOLDER Toolbox DT_MT
SCHEDA INFORMATIVA Toolbox DT_MT
DOSSIER DESCRIPTIF Toolbox DT_MT
LAGO ACCESSORI SRL / 15.03.2022

LINKING COMPONENTS / SUPPORTI / ELEMENTS DE RACCORDEMENT
DESCRIPTION MATERIAL REFERENCES
DESCRIZIONE MATERIALE RIFERIMENTO
DESCRIPTION MATERIEL REFERENCE

- U SHAPED BRACKET / SUPPORTI A U / SUPPORTEN EN U
- L SHAPED CORNER BRACKET / SUPPORTI A L / SUPPORT EQUERRE L

RANGE / GAMMA / GAMME DAY TRIPPIN'

SIDE MEMBER / LONGHERONE / LONGERON		LINKING COIMPONENTS / SUPPORTI / ELEMENTS DE RACCORDEMENT
446060116	DAY TRIPPIN' 400	(U) 311641000 (L) 311632000
446060100	DAY TRIPPIN' 500	(U) 311641000 (L) 311632000
446060090	DAY TRIPPIN' 600	(U) 311642030 (L) 311633030
446060045	DAY TRIPPIN' 700	(U) 311669040 (L) 311668040
446060030	DAY TRIPPIN' 800	(U) 311642050 (L) 311633050
446060020	DAY TRIPPIN' 1000	(U) 311669060 (L) 311668060

RANGE / GAMMA / GAMME ORIGIN

SIDE MEMBER / LONGHERONE / LONGERON		**LINKING COIMPONENTS / SUPPORTI / ELEMENTS DE RACCORDEMENT**
446064116	**ORIGIN 400**	**(U) 311641000 (L) 311632000**
446064100	**ORIGIN 500**	**(U) 311641000 (L) 311632000**
446064090	**ORIGIN 600**	**(U) 311642030 (L) 311633030**
446064045	**ORIGIN 700**	**(U) 311669040 (L) 311668040**
446064030	**ORIGIN 800**	**(U) 311642050 (L) 311633050**
446064020	**ORIGIN 1000**	**(U) 311669060 (L) 311668060**

RANGE / GAMMA / GAMME MOTHER TRUCKER

SIDE MEMBER / LONGHERONE / LONGERON		LINKING COIMPONENTS / SUPPORTI / ELEMENTS DE RACCORDEMENT
446062116	MOTHER TRUCKER 400	(U) 311641000 (L) 311632000
446062100	MOTHER TRUCKER 500	(U) 311641000 (L) 311632000
446062090	MOTHER TRUCKER 600	(U) 311642030 (L) 311633030
446062045	MOTHER TRUCKER 700	(U) 311669040 (L) 311668040
446062030	MOTHER TRUCKER 800	(U) 311642050 (L) 311633050
446062020	MOTHER TRUCKER 1000	(U) 311669060 (L) 311668060

VEHICLE FITTING MODE BY BOLTS / FISSAGGIO SU VEICOLO TRAMITE BULLONI / MODE DE FINXATION AU VEHICULE PAR BOULLONAGE

FITTING MODE TO THE COMPONENTS ENSURING PROTECTION BY BOLTS / FISSAGGIO DEGLI ELEMENTI DI PROTEZIONE LATERALE TRAMITE BULLONI / MODE DE FIXATION AUX ELEMENTS ASSURANT LA PROTECTION PAR BOULLONAGE

TOOLBOXES CAN BE MOUNTED WITHOUT THE SUPPORTS INDICATED IN THIS DOCUMENT
SUPPORTS FOR TOOLBOX MOUNTING HAVE TO CORRESPOND IN TERMS OF STRUCTURAL RESISTANCE TO THE ONES INDICATED IN THIS DOCUMENT THAT IS TO SAY THAT THEY HAVE BE SUFFICIENTLY RIGID AND MADE OF METAL OR OTHER MATERIAL TO SATISFY THE REQUIREMENTS OF REGULATION ECE 73.01

LE CASSETTE POSSONO ESSERE MONTATE SENZA I SUPPORTI INDICATI NEL PRESENTE DOCUMENTO
I SUPPORTI PER IL MONTAGGIO SUL VEICOLO DEVONO CORRISPONDERE IN TERMINI DI RESISTENZA AI SUPPORTI INDICATI NEL PRESENTE DOCUMENTO OVVERO ESSERE SUFFICIENTEMENTE RIGIDI E REALIZZATI IN METALLO O ALTRO MATERIALE IDONEO A SODDISFARE I REQUISITI INDICATI NEL REGOLAMENTO ECE 73.01

LES COFFRES PEUVENT ETRE MONTES SANS LES SUPPORTS INDIQUE DANS CE DOCUMENT
LES SUPPORTS POUR LE MONTAGE SUR LE VEHICULE DOIVENT CORRESPONDRE EN TERME DE RESISTANCE AUX SUPPORTS INDIQUES DANS CE DOCUMENT DONC ETRE SUFFISAMMENT RIGIDES ET FABRIQUES EN METAL OU DANS UN AUTRE MATERIAU APPROPRIE, POUR SATISFAIRE LES REQUETTES MENTIONNEE DANS LE REGLEMENT ECE 73.01

CHASSIS SUPPORTS

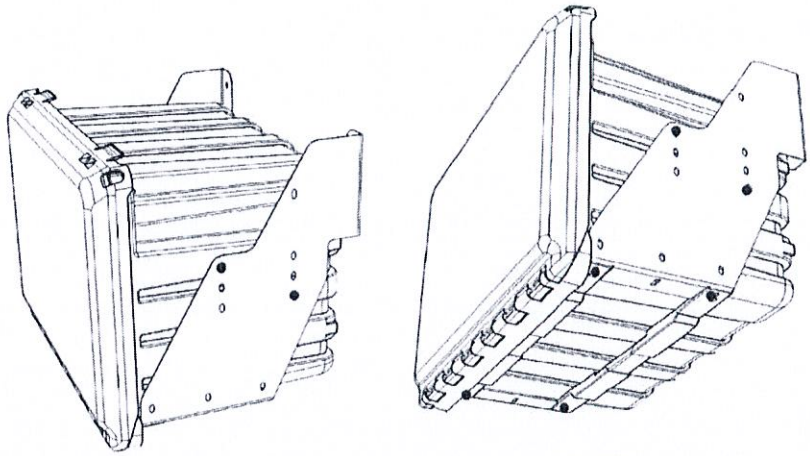

SCREW, BOLT AND WASHER ALWAYS JOIN TOGETHER SUPPORTS AND TOOLBOX

NUMBER OF BOLTS/NUTS MIGHT BE MORE THAN ENOUGH

Questo materiale è di riservata proprietà e strettamente confidenziale e non può essere copiato, riprodotto o diffuso, né in parte né in tutto, senza l'espressa autorizzazione di Lago Accessori Srl.
This document is strictly private, confidential and personal to its recipients and should not be copied, distributed or reproduced in whole or in part, without the express permission of Lago Accessori Srl.

LAGO

PLATFORM SUPPORTS

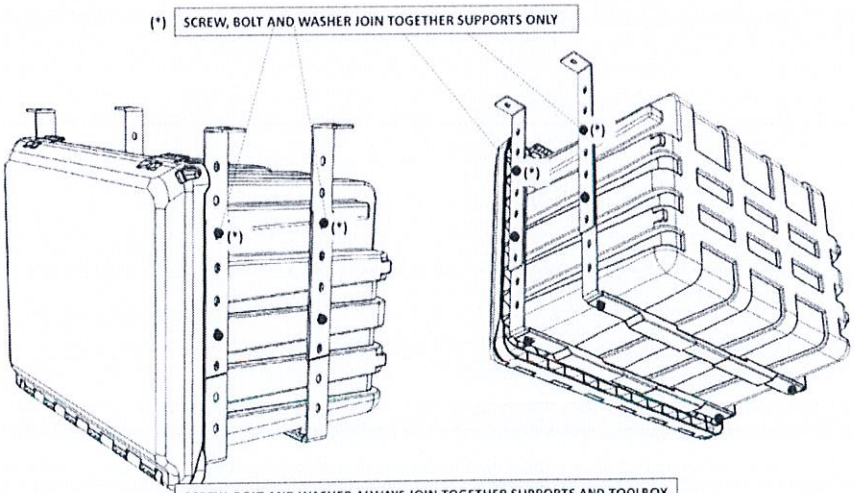

SCREW, BOLT AND WASHER ALWAYS JOIN TOGETHER SUPPORTS AND TOOLBOX

NUMBER OF BOLTS/NUTS MIGHT BE MORE THAN ENOUGH

Questo materiale è di riservata proprietà e strettamente confidenziale e non può essere copiato, riprodotto o diffuso, né in parte né in tutto, senza l'espressa autorizzazione di Lago Accessori Srl.
This document is strictly private, confidential and personal to its recipients and should not be copied, distributed or reproduced in whole or in part, without the express permission of Lago Accessori Srl.

LAGO

LAGO Via 1° Maggio, 20 35014 Fontaniva (Padova) - ITALY www.lagoaccessori.net	**INFORMATION FOLDER** Toolbox DT_MT **SCHEDA INFORMATIVA** Toolbox DT_MT **DOSSIER DESCRIPTIF** Toolbox DT_MT LAGO ACCESSORI SRL / 15.03.2022

DRAWINGS ATTACHED / DISEGNI ALLEGATI / SCHEMAS ET PHOTOS FOURNIS

DIMENSIONAL DRAWINGS FOR THE TOOLBOES / DISEGNI DELLE CASSETTE / SCHEMAS COTES DES COFFRES

446060020
446060030
446060045
446060090
446060100
446060116

446064020
446064030
446064045
446064090
446064100
446064116

446062020
446062030
446062045
446062090
446062100
446062116

DIMENSIONAL DRAWINGS FOR THE BRACKETS / DISEGNI DEI SUPPORTI / SCHEMAS COTES DES SUPPORTS

311632000
311633030
311668040
311633050
311668060

311641000
311642030
311669040
311642050
311669060

(1) Strikethrough were not used

Informations N2: vehicles designed and constructed for the carriage of goods and having a maximum mass exceeding 3.5 tonnes but not exceeding 12 tonnes
N3: vehicles designed and constructed for the carriage of goods and having maximum mass exceeding 12 tonnes
O3: trailers with a maximum mass exceeding 3.5 tonnes but not exceeding 12 tonnes
O4: trailers with a maximum mass exceeding 10 tonnes

For motor vehicles of category N
BA lorry
BB van
BD trailer towing vehicle (road tractor)

For vehicles of category O
DA semi-trailer
DB drawbar trailer
DC centre-axle-trailer

(1) Cancellare la dicitura inutile

Informazioni N2: veicoli progettati e costruiti per il trasporto di merci, aventi massa massima superiore a 3.5 tonnellate ma non superiore a 12 tonnellate
N3: veicoli progettati e costruiti per il trasporto di merci, aventi massa massima superiore a 12 tonnellate
O3: rimorchi con una massa massima superiore a 3.5 tonnellate ma non superiore a 10 tonnellate
O4: rimorchi con una massa massima superiore a 10 tonnellate

For motor vehicles of category N
BA autocarro
BB furgone
BD veicolo trattore per rimorchi (trattore stradale)

For vehicles of category O
DA semirimorchio
DB rimorchio a timone
DC rimorchio ad asse centrale

(1) Biffer la mention inutile

Pour information N2: véhicules concus et construits pour le transport de marchandises ayant un poids maximal supérieure a 3.5 tonnes, mais ne dèpassant pas 12 tonnes
N3: véhicules concus et construits pour le transport de marchandises ayant un poids maximal supérieure a 12 tonnes
O3: remorques d'une masse maximale dépassant 3.5 tonnes, mais ne dépassant pas 10 tonnes
O4: remorques d'une masse maximale dépassant 10 tonnes

Véhicules à moteur de la categorie N
BA camion
BB camionette
BD véhicule tracteur de remorque (tracteur routier)

Véhicules de la categorie O
DA semi-remorque
DB remorque à timon d'attelage
DC remorque à essieu central

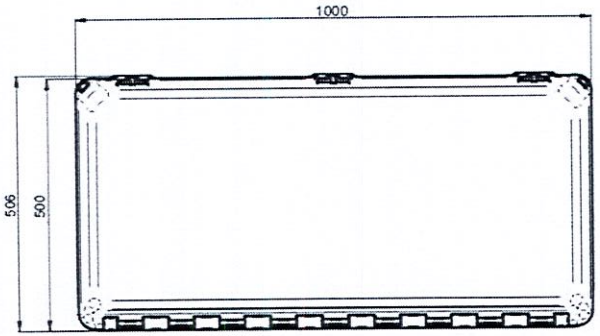

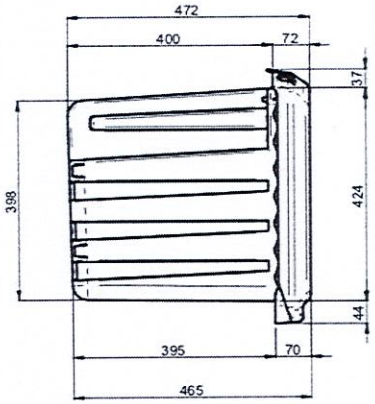

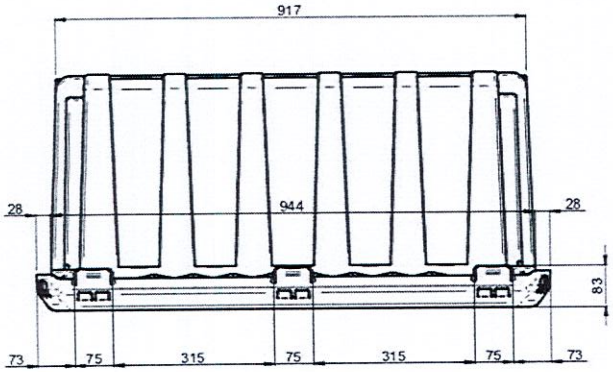

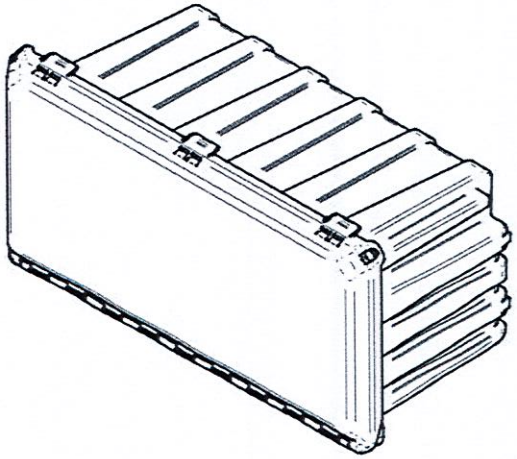

ACCURACY LINEAR DIMENSIONS							
to 6	±0.1	from 6 to 30	±0.2	from 30 to 120	±0.3	from 120 to 315	±0.5
from 315 to 1000	±0.8	from 1000 to 2000	±1.2	from 2000 to 4000	±2.0	from 4000	±3.0
ANGULAR DIMENSIONS							
from 6	±1°	to 6 from 30	±30'	from 30 to 120	±20'	from 120	±10'

REVIEW				
N°2	DATE	DESCRIPTION		DRAFTSMAN
N°1	DATE	DESCRIPTION		DRAFTSMAN

MATERIAL	TREATMENT	DRAFTSMAN
Polypropylene	-	Marco Simion

LAGO

Lago Accessori srl
via 1°Maggio 20, 35014 Fontaniva (Pd) Italy
Tel.: +39 049 5940932 Fax: +39 049 5940599
www.lagoaccessori.net info@lagoaccessori.net

SCALE	CREATION DATE	SET
1 : 10	25/05/2020	
SHEET 1/1		DRAWING CODE 446060020
		DESCRIPTION CASSETTA DAY TRIPPIN' 1000
		DESCRIPTION OF FINISHED PRODUCT -

LAGO ACCESSORI COPYRIGHT. ANY RIPRODUCTION WITHOUT WRITTEN PERMISSION OF LAGO ACCESSORI IS FORBIDDEN

E57*73R01/02*0010*01

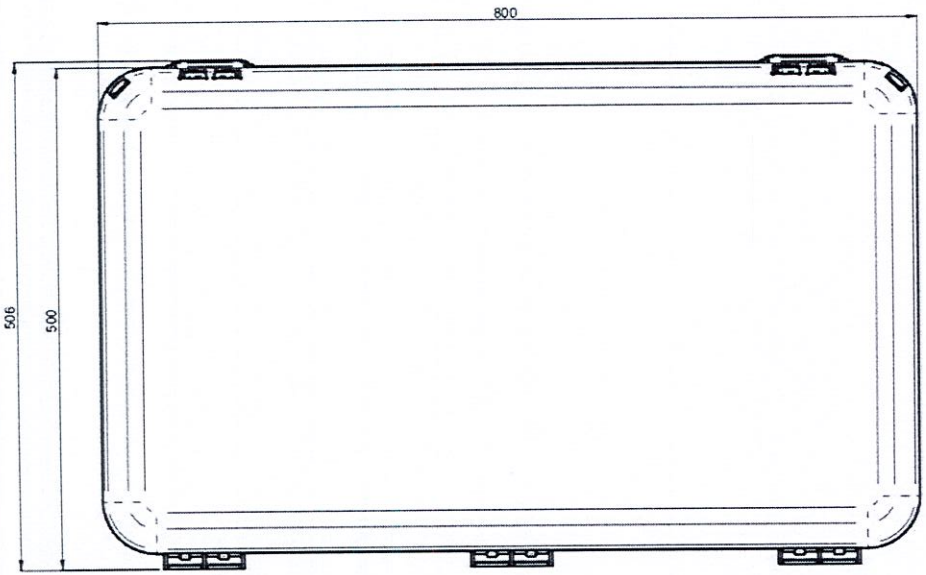

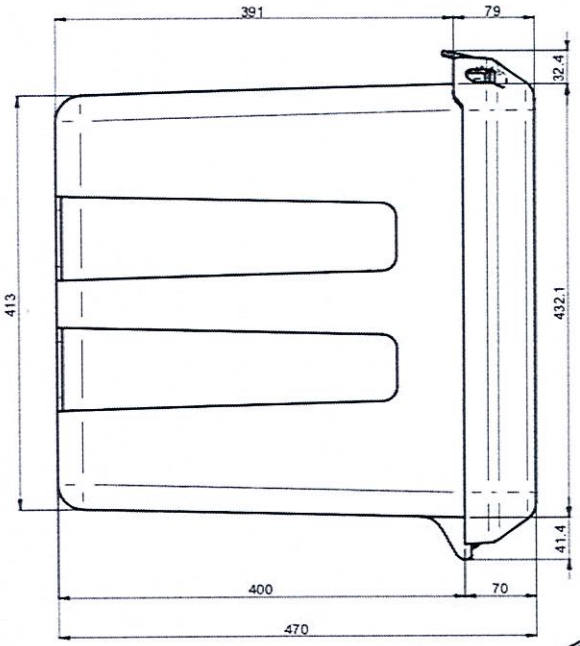

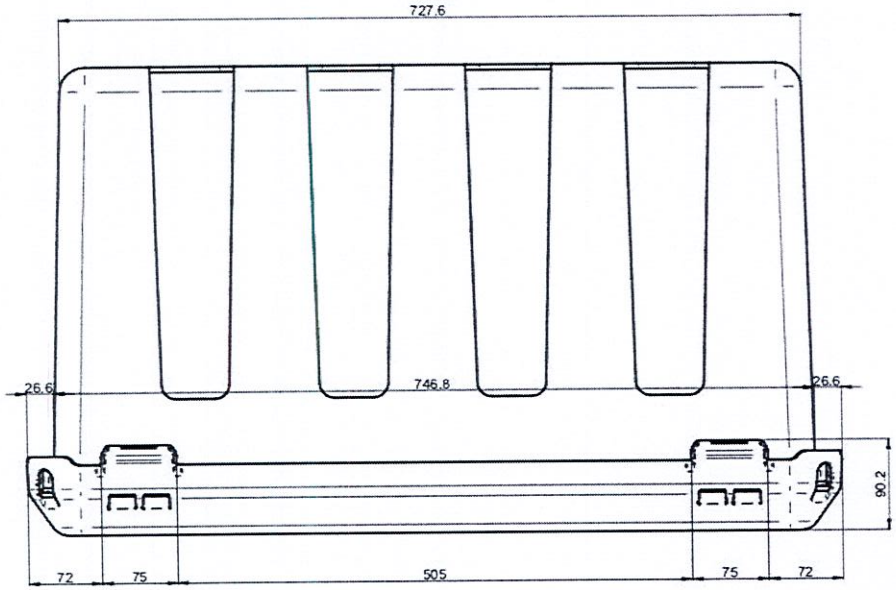

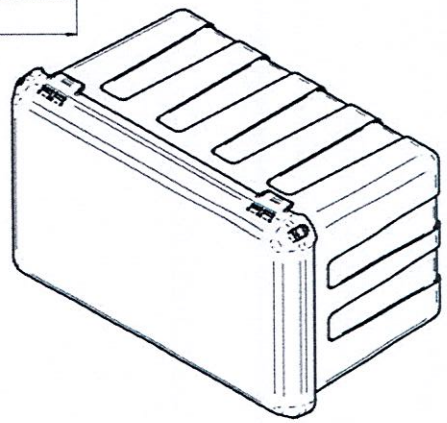

ACCURACY LINEAR DIMENSIONS							
to 6	±0.1	from 6 to 30	±0.2	from 30 to 120	±0.3	from 120 to 315	±0.5
from 315 to 1000	±0.8	from 1000 to 2000	±1.2	from 2000 to 4000	±2.0	from 4000	±3.0
ANGULAR DIMENSIONS							
from 6	±1°	to 6 from 30	±30'	from 30 to 120	±20'	from 120	±10'

REVIEW		DATE	DESCRIPTION	DRAFTSMAN
	N°2			
	N°1			

MATERIAL	TREATMENT	DRAFTSMAN
Polypropylene		Marco Simion

CREATION DATE 25/05/2020	SET	
SCALE 1 : 5	DRAWING CODE 44 60 60 030	
SHEET 1/1	DESCRIPTION 800 DAY TRIPPIN'	
	DESCRIPTION OF FINISHED PRODUCT	

LAGO
Lago Accessori srl
via 1°Maggio 20, 35014 Fontaniva (Pd) Italy
Tel.: +39 049 5940932 Fax: +39 049 5940599
www.lagoaccessori.net info@lagoaccessori.net

LAGO ACCESSORI COPYRIGHT. ANY RIPRODUCTION WITHOUT WRITTEN PERMISSION OF LAGO ACCESSORI IS FORBIDDEN

E57*73R01/02*0010*01

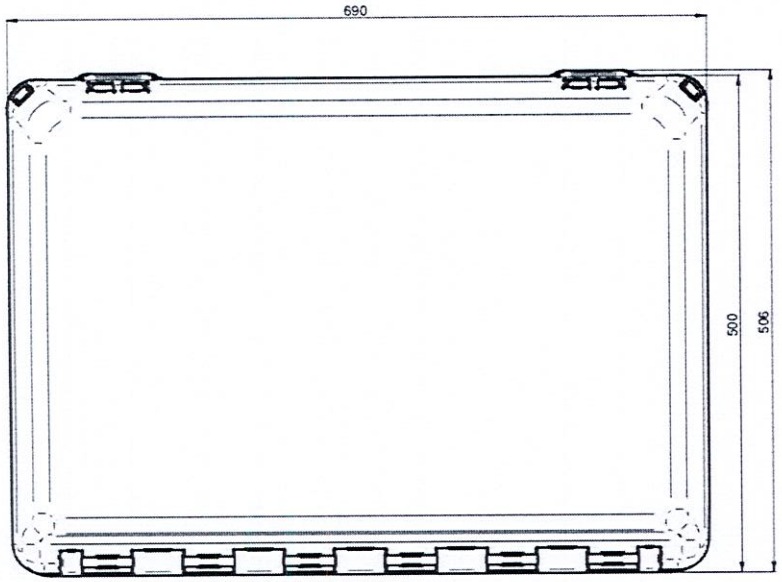

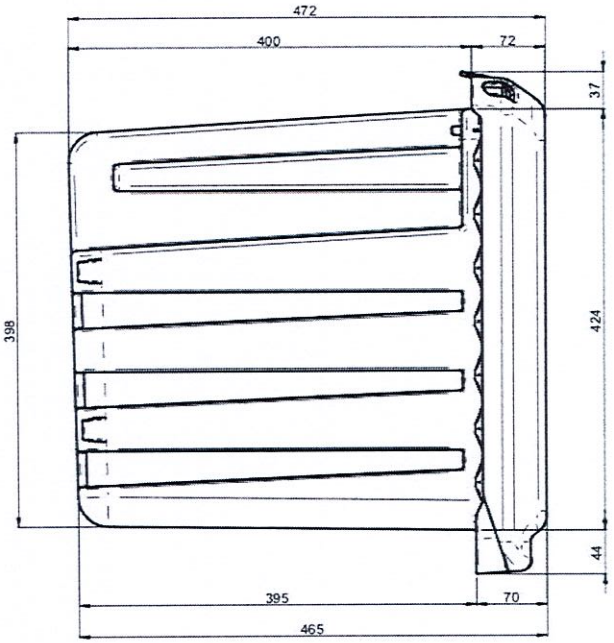

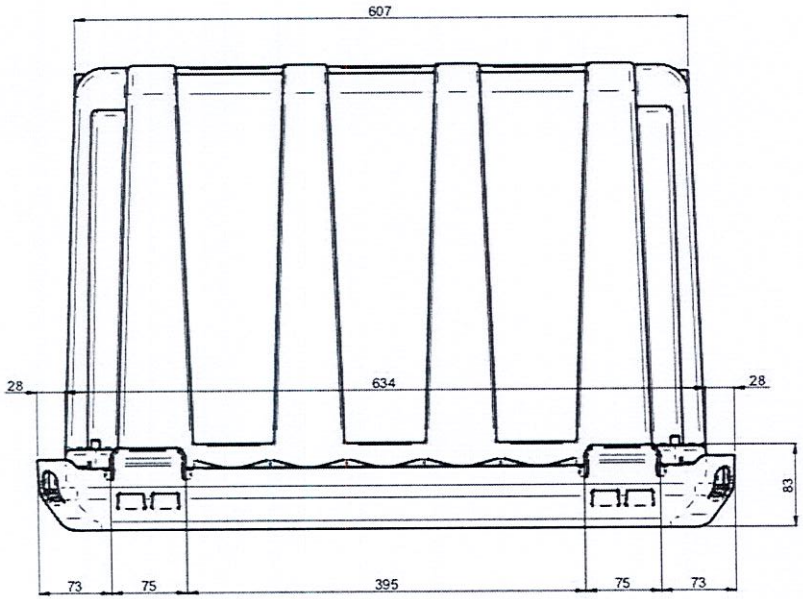

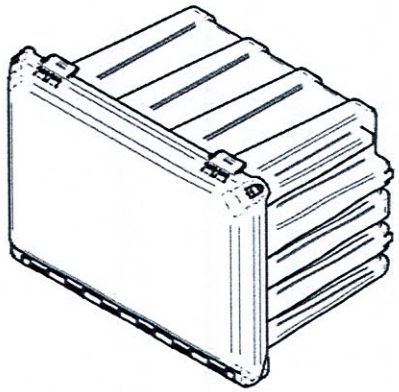

ACCURACY LINEAR DIMENSIONS							
to 6	±0.1	from 6 to 30	±0.2	from 30 to 120	±0.3	from 120 to 315	±0.5
from 315 to 1000	±0.8	from 1000 to 2000	±1.2	from 2000 to 4000	±2.0	from 4000	±3.0
ANGULAR DIMENSIONS							
from 6	±1°	to 6 from 30	±30'	from 30 to 120	±20'	from 120	±10'

REVIEW	DATE	DESCRIPTION	DRAFTSMAN
N°2			
N°1			

MATERIAL	TREATMENT	DRAFTSMAN
Polypropylene	-	Marco Simion

LAGO

Lago Accessori srl
via 1°Maggio 20, 35014 Fontaniva (Pd) Italy
Tel.: +39 049 5940932 Fax: +39 049 5940599
www.lagoaccessori.net info@lagoaccessori.net

CREATION DATE	SET
25/05/2020	
SCALE 1 : 5	DRAWING CODE 446060045
SHEET 1/1	DESCRIPTION CASSETTA DAY TRIPPIN' 700
	DESCRIPTION OF FINISHED PRODUCT

LAGO ACCESSORI COPYRIGHT. ANY RIPRODUCTION WITHOUT WRITTEN PERMISSION OF LAGO ACCESSORI IS FORBIDDEN

E57*73R01/02*0010*01

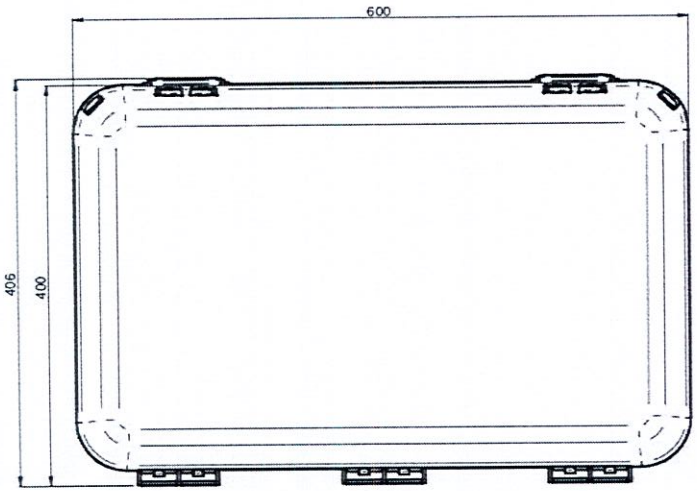

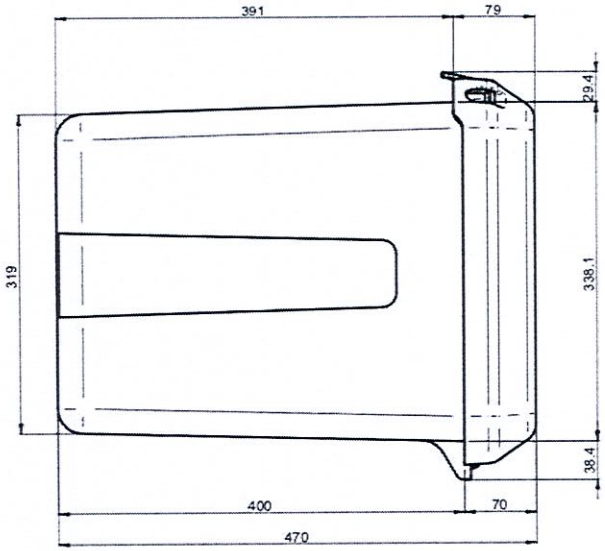

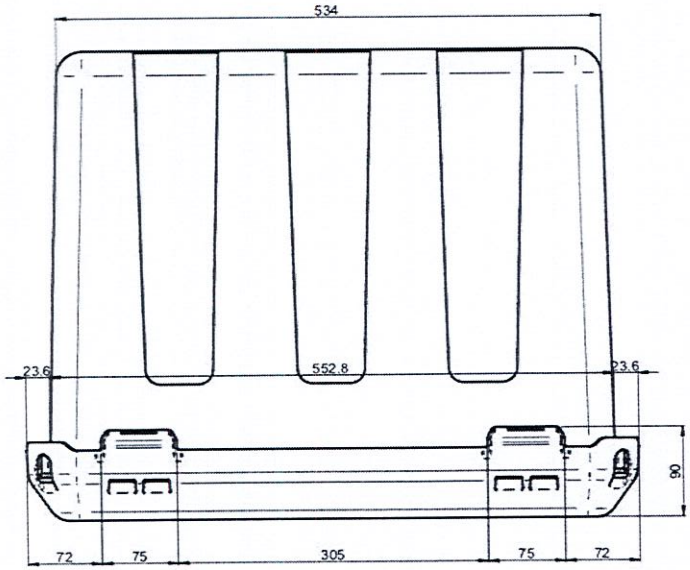

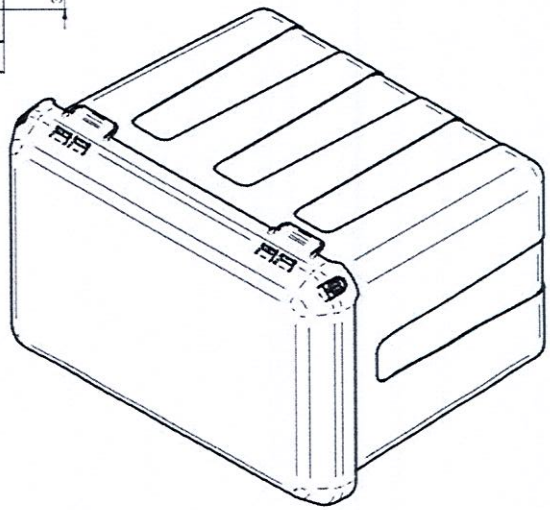

ACCURACY									
LINEAR DIMENSIONS									
to 6	±0.1	from 6 to 30	±0.2	from 30 to 120	±0.3	from 120 to 315	±0.5		
from 315 to 1000	±0.8	from 1000 to 2000	±1.2	from 2000 to 4000	±2.0	from 4000	±3.0		
ANGULAR DIMENSIONS									
from 6	±1°	to 6 from 30	±30'	from 30 to 120	±20'	from 120	±10'		

REVIEW				
N°2	DATE	DESCRIPTION		DRAFTSMAN
N°1	DATE	DESCRIPTION		DRAFTSMAN
MATERIAL: Polypropylene		TREATMENT: -		DRAFTSMAN: Marco Simion
CREATION DATE: 25/05/2020		SET		
SCALE: 1 : 5		DRAWING CODE: 44 60 60 090		
SHEET: 1/1		DESCRIPTION: 600 DAY TRIPPIN'		
		DESCRIPTION OF FINISHED PRODUCT		

LAGO
Lago Accessori srl
via 1°Maggio 20, 35014 Fontaniva (Pd) Italy
Tel: +39 049 5940932 Fax: +39 049 5940599
www.lagoaccessori.net info@lagoaccessori.net

LAGO ACCESSORI COPYRIGHT. ANY RIPRODUCTION WITHOUT WRITTEN PERMISSION OF LAGO ACCESSORI IS FORBIDDEN

E57*73R01/02*0010*01

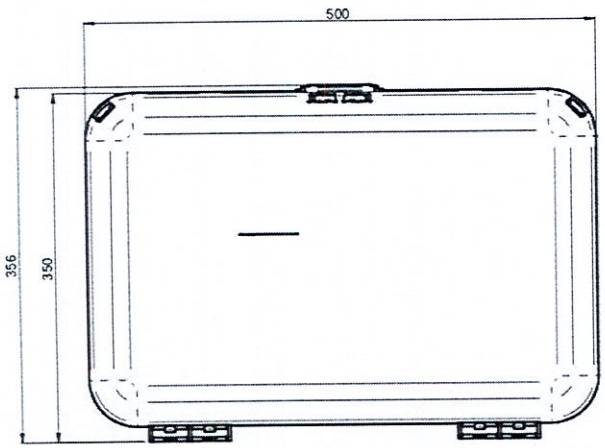

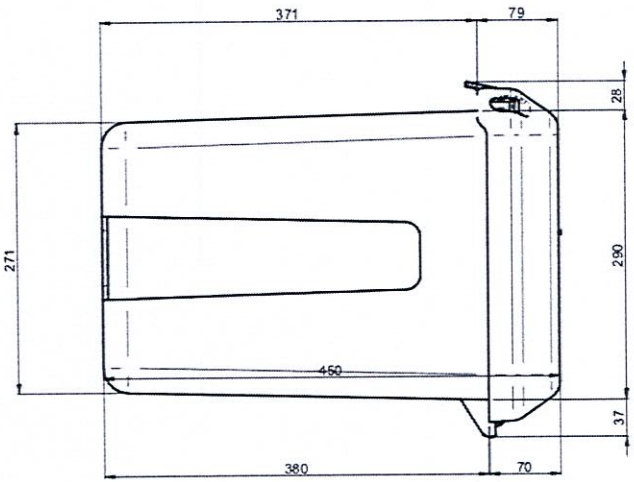

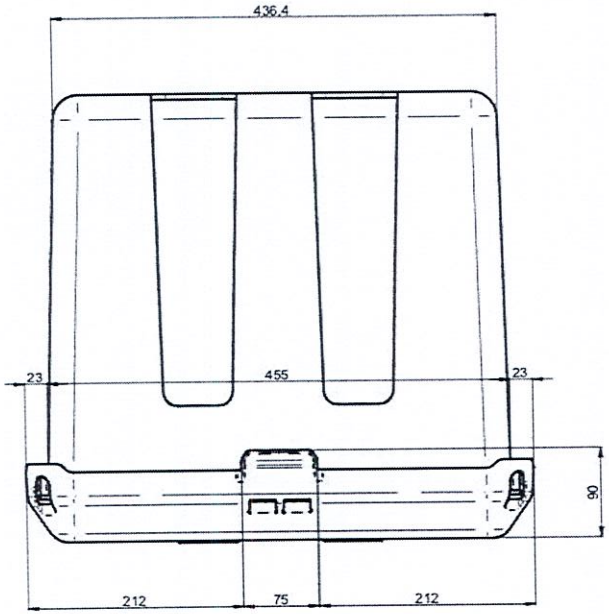

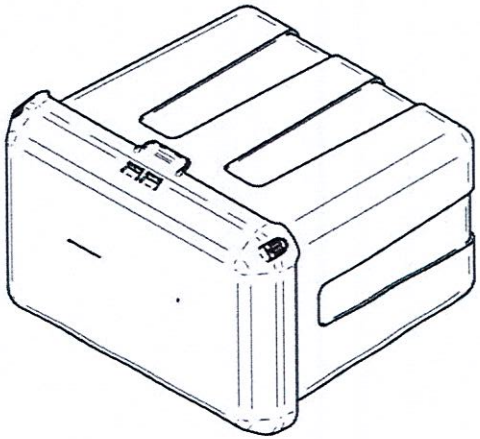

ACCURACY LINEAR DIMENSIONS							
0÷6	±0.1	from 6 to 30	±0.2	from 30 to 120	±0.3	from 120 to 315	±0.5
from 315 to 1000	±0.8	from 1000 to 2000	±1.2	from 2000 to 4000	±2.0	from 4000	±3.0
ANGULAR DIMENSIONS							
from 6	±1°	to 6 from 30	±30'	from 30 to 120	±20'	from 120	±10'

REVIEW		DATE	DESCRIPTION	DRAFTSMAN
	N°2			
	N°1			

MATERIAL	TREATMENT	DRAFTSMAN
Polypropylene	-	Marco Simion

LAGO

Lago Accessori srl
via 1°Maggio 20, 35014 Fontaniva (Pd) Italy
Tel.: +39 049 5940932 Fax: +39 049 5940599
www.lagoaccessori.net info@lagoaccessori.net

SCALE	1 : 5
SHEET	1/1
CREATION DATE	25/05/2020
SET	
DRAWING CODE	44 60 60 100
DESCRIPTION	500 DAY TRIPPIN'
DESCRIPTION OF FINISHED PRODUCT	

LAGO ACCESSORI COPYRIGHT. ANY RIPRODUCTION WITHOUT WRITTEN PERMISSION OF LAGO ACCESSORI IS FORBIDDEN

E57*73R01/02*0010*01

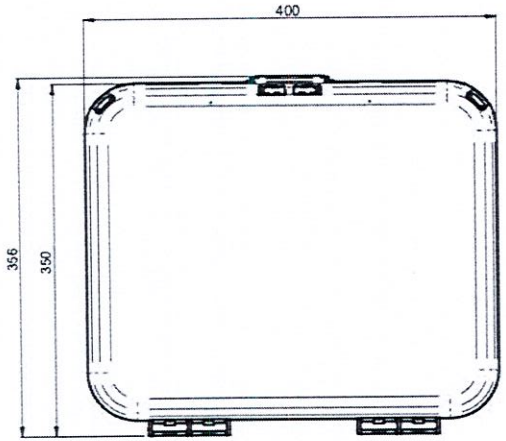

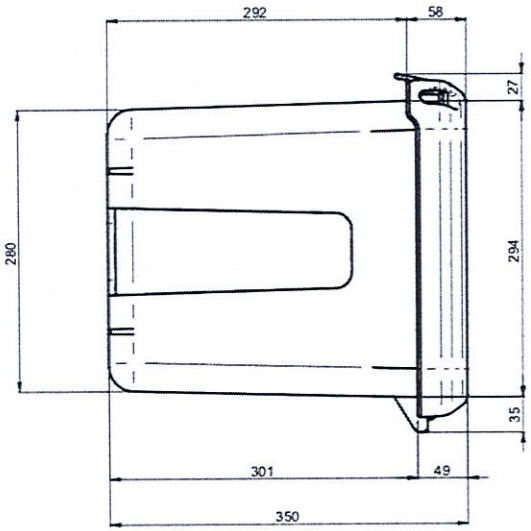

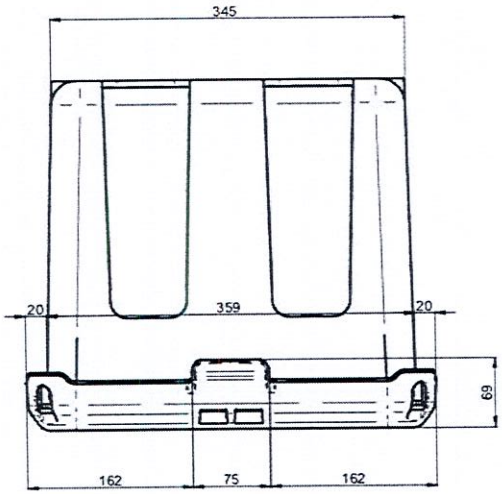

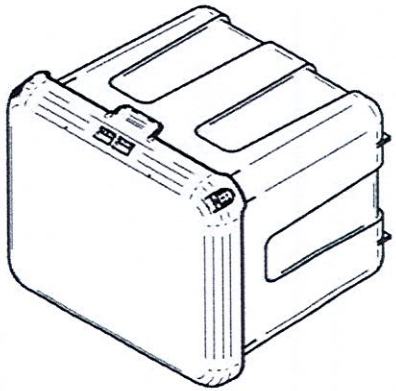

ACCURACY LINEAR DIMENSIONS							
to 6	±0.1	from 6 to 30	±0.2	from 30 to 120	±0.3	from 120 to 315	±0.5
from 315 to 1000	±0.8	from 1000 to 2000	±1.2	from 2000 to 4000	±2.0	from 4000	±3.0
ANGULAR DIMENSIONS							
from 6	±1°	to 6 from 30	±30'	from 30 to 120	±20'	from 120	±10'

REVIEW	DATE	DESCRIPTION	DRAFTSMAN
N°2			
N°1			

MATERIAL	TREATMENT	DRAFTSMAN
Polypropylene	-	Marco Simion

LAGO

Lago Accessori srl
via 1°Maggio 20, 35014 Fontaniva (Pd) Italy
Tel: +39 049 5940932 Fax: +39 049 5940599
www.lagoaccessori.net info@lagoaccessori.net

SCALE	CREATION DATE	SET
1 : 5	25/05/2020	
SHEET 1/1		DRAWING CODE 44 60 60 116
		DESCRIPTION 400 DAY TRIPPIN'
		DESCRIPTION OF FINISHED PRODUCT

LAGO ACCESSORI COPYRIGHT. ANY RIPRODUCTION WITHOUT WRITTEN PERMISSION OF LAGO ACCESSORI IS FORBIDDEN

E57*73R01/02*0010*01

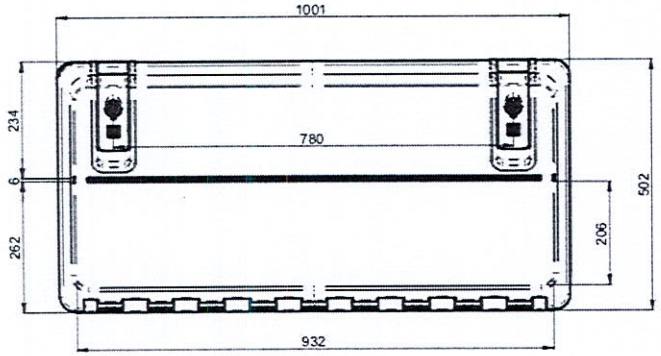

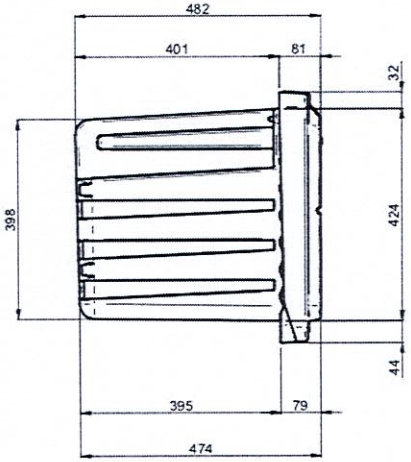

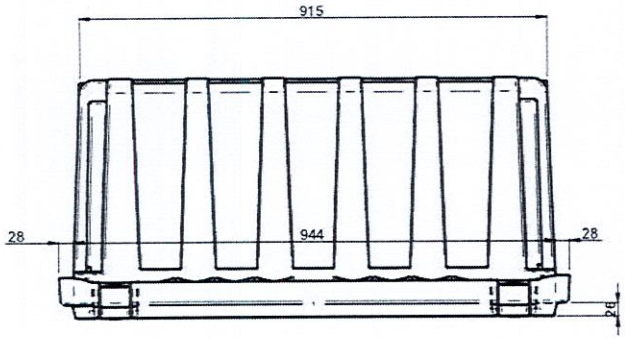

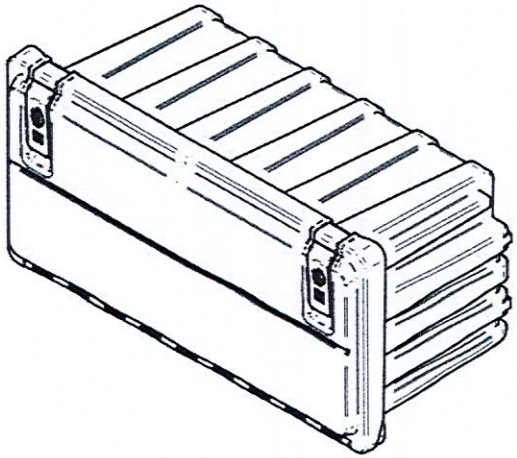

ACCURACY							
LINEAR DIMENSIONS							
to 6	±0.1	from 6 to 30	±0.2	from 30 to 120	±0.3	from 120 to 315	±0.5
from 315 to 1000	±0.8	from 1000 to 2000	±1.2	from 2000 to 4000	±2.0	from 4000	±3.0
ANGULAR DIMENSIONS							
from 6	±1°	to 6 from 30	±30'	from 30 to 120	±20'	from 120	±10'

REVIEW		DATE	DESCRIPTION	DRAFTSMAN
	N°2			
	N°1			

MATERIAL	TREATMENT	DRAFTSMAN
Polypropylene	.	Marco Simion

LAGO

Lago Accessori srl
via 1°Maggio 20, 35014 Fontaniva (Pd) Italy
Tel: +39 049 5940932 Fax: +39 049 5940599
www.lagoaccessori.net info@lagoaccessori.net

CREATION DATE	SET
25/05/2020	
SCALE 1 : 10	DRAWING CODE 446062020
SHEET 1/1	DESCRIPTION CASSETTA MOTHER TRUCKER 1000
	DESCRIPTION OF FINISHED PRODUCT

LAGO ACCESSORI COPYRIGHT. ANY RIPRODUCTION WITHOUT WRITTEN PERMISSION OF LAGO ACCESSORI IS FORBIDDEN

E57*73R01/02*0010*01

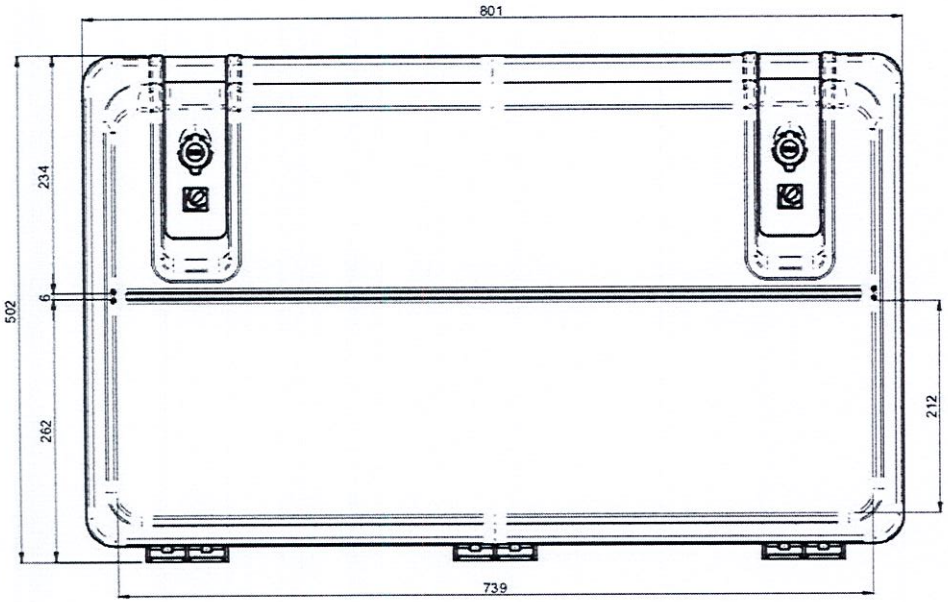

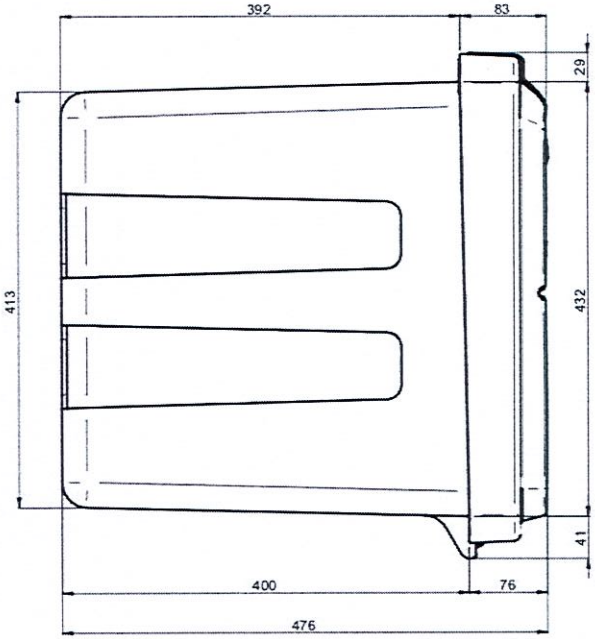

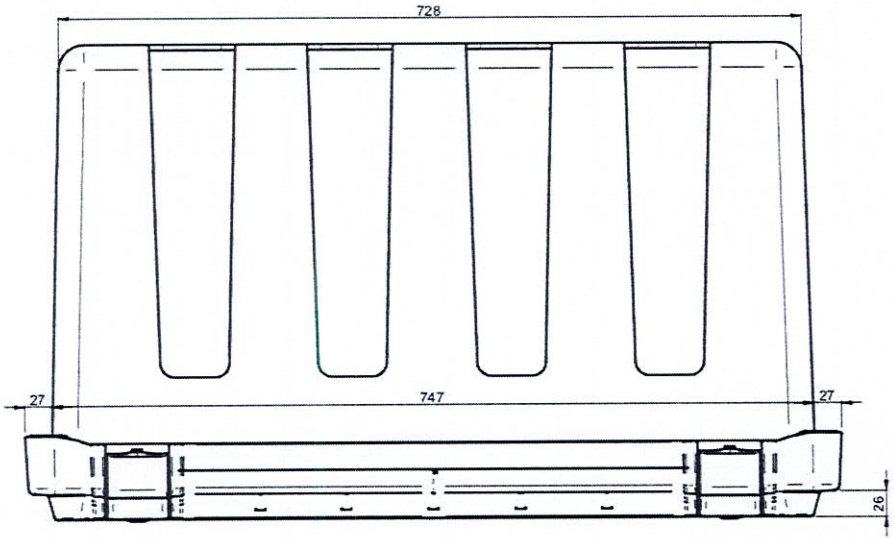

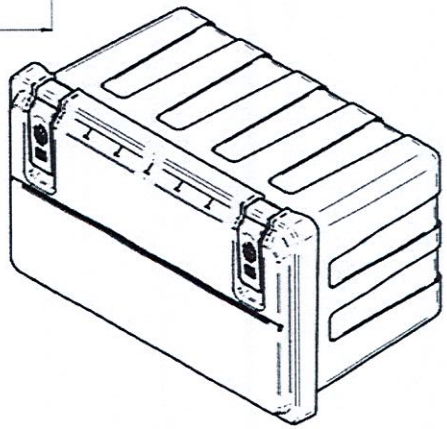

ACCURACY LINEAR DIMENSIONS											
to 6	±0.1	from 6 to 30	±0.2	from 30 to 120	±0.3	from 120 to 315	±0.5				
from 315 to 1000	±0.8	from 1000 to 2000	±1.2	from 2000 to 4000	±2.0	from 4000	±3.0				
ANGULAR DIMENSIONS											
from 6	±1°	to 6 from 30	±30'	from 30 to 120	±20'	from 120	±10'				

REVIEW				
N°2	DATE	DESCRIPTION		DRAFTSMAN
N°1	DATE	DESCRIPTION		DRAFTSMAN
MATERIAL: Polypropylene		TREATMENT		DRAFTSMAN: Marco Simion

LAGO

Lago Accessori srl
via 1°Maggio 20, 35014 Fontaniva (Pd) Italy
Tel.: +39 049 5940932 Fax: +39 049 5940589
www.lagoaccessori.net info@lagoaccessori.net

SCALE	CREATION DATE	SET
1 : 5	25/05/2020	DRAWING CODE: 44 60 62 030
SHEET 1/1		DESCRIPTION: 800 MOTHER TRUCKER
		DESCRIPTION OF FINISHED PRODUCT

LAGO ACCESSORI COPYRIGHT ANY RIPRODUCTION WITHOUT WRITTEN PERMISSION OF LAGO ACCESSORI IS FORBIDDEN

E57*73R01/02*0010*01

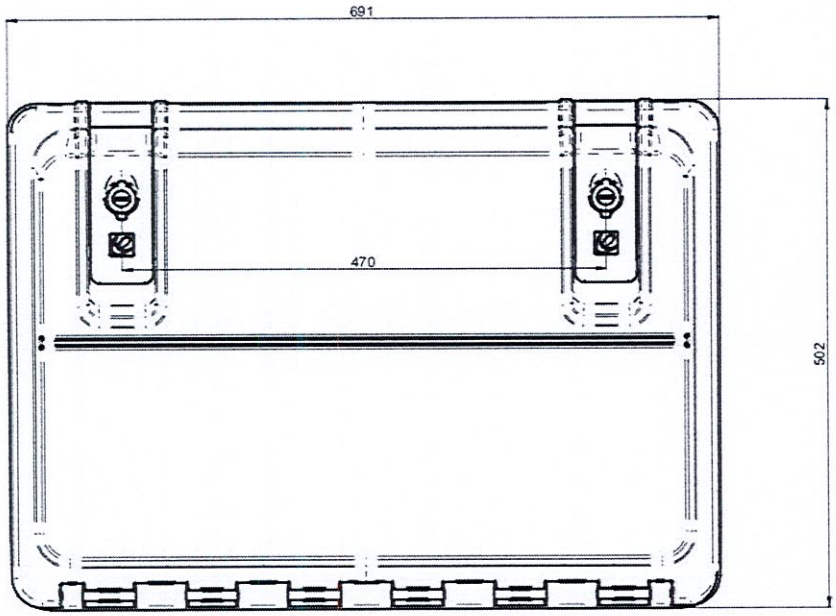

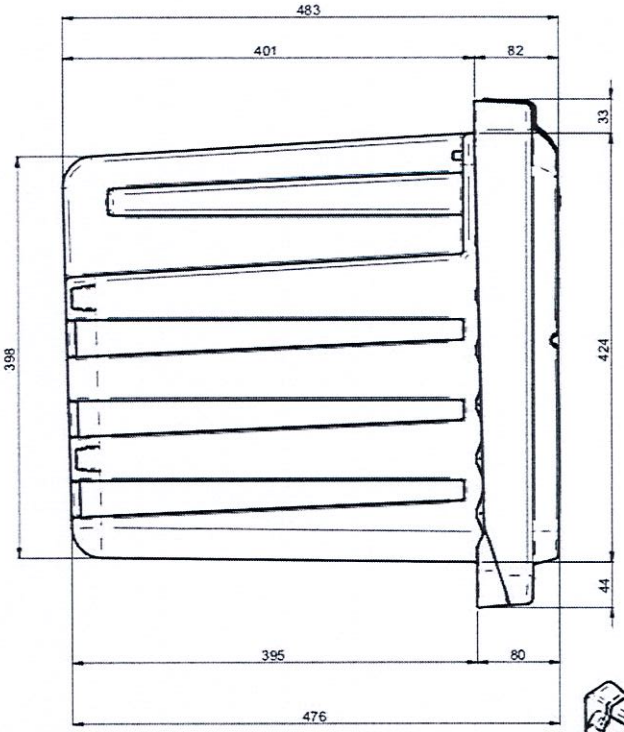

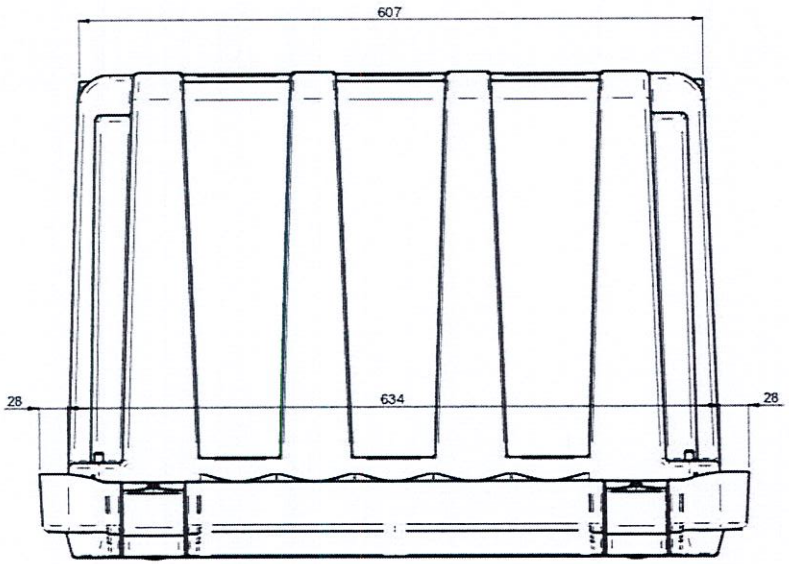

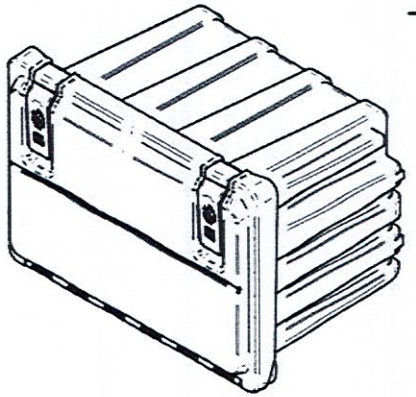

ACCURACY LINEAR DIMENSIONS							
to 6	±0.1	from 6 to 30	±0.2	from 30 to 120	±0.3	from 120 to 315	±0.5
from 315 to 1000	±0.8	from 1000 to 2000	±1.2	from 2000 to 4000	±2.0	from 4000	±3.0
ANGULAR DIMENSIONS							
from 6	±1°	to 6 from 30	±30'	from 30 to 120	±20'	from 120	±10'

REVIEW		DATE	DESCRIPTION	DRAFTSMAN
	N°2		-	
	N°1		-	

MATERIAL	TREATMENT	DRAFTSMAN
Polypropylene	-	Marco Simion

LAGO	CREATION DATE 25/05/2020	SET
	SCALE 1 : 5	DRAWING CODE 446062045
	SHEET 1/1	DESCRIPTION CASSETTA MOTHER TRUCKER 700
		DESCRIPTION OF FINISHED PRODUCT

Lago Accessori srl
via 1°Maggio 20, 35014 Fontaniva (Pd) Italy
Tel.: +39 049 5940932 Fax: +39 049 5940599
www.lagoaccessori.net info@lagoaccessori.net

LAGO ACCESSORI COPYRIGHT. ANY RIPRODUCTION WITHOUT WRITTEN PERMISSION OF LAGO ACCESSORI IS FORBIDDEN

E57*73R01/02*0010*01

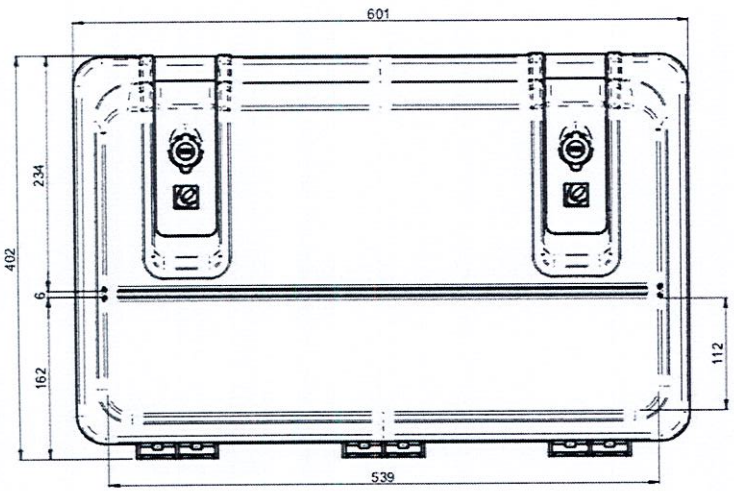

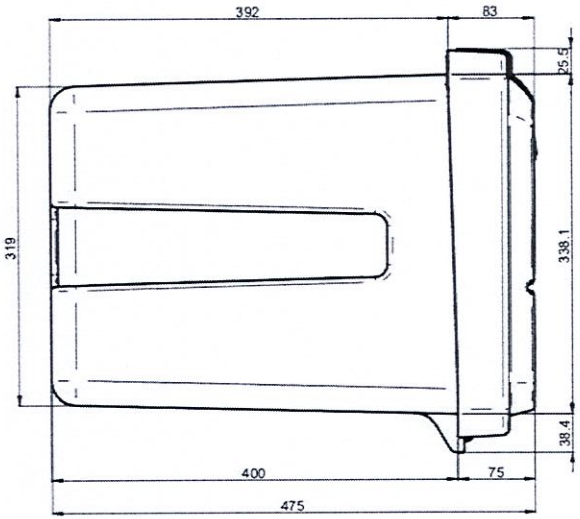

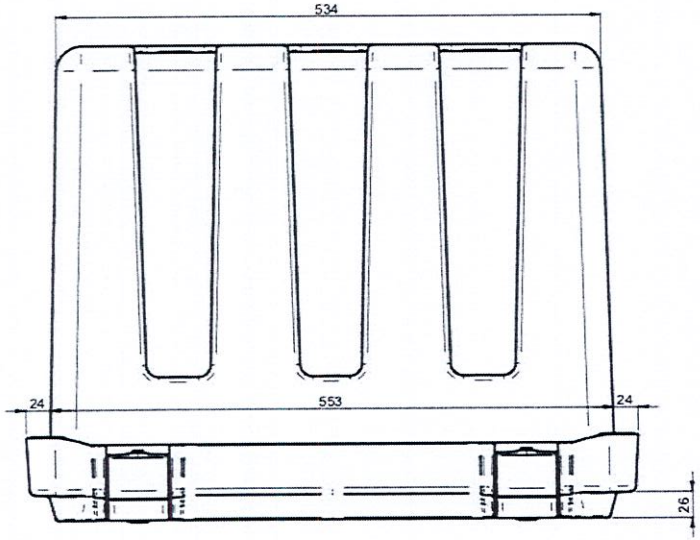

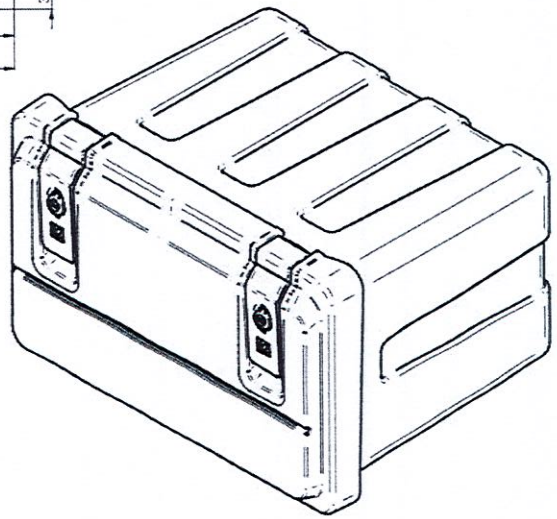

ACCURACY LINEAR DIMENSIONS									
to 6	±0.1	from 6 to 30	±0.2	from 30 to 120	±0.3	from 120 to 315	±0.5		
from 315 to 1000	±0.8	from 1000 to 2000	±1.2	from 2000 to 4000	±2.0	from 4000	±3.0		
ANGULAR DIMENSIONS									
from 6	±1°	to 6 from 30	±30'	from 30 to 120	±20'	from 120	±10'		

REVIEW	DATE	DESCRIPTION	DRAFTSMAN
N°2			
N°1			

MATERIAL	TREATMENT	DRAFTSMAN
Polypropylene	-	Marco Simion

LAGO

Lago Accessori srl
via 1°Maggio 20, 35014 Fontaniva (Pd) Italy
Tel.: +39 049 5940932 Fax: +39 049 5940599
www.lagoaccessori.net info@lagoaccessori.net

CREATION DATE	SET
25/05/2020	
SCALE 1 : 5	DRAWING CODE 44 60 62 090
SHEET 1/1	DESCRIPTION 600 MOTHER TRUCKER
	DESCRIPTION OF FINISHED PRODUCT

LAGO ACCESSORI COPYRIGHT. ANY RIPRODUCTION WITHOUT WRITTEN PERMISSION OF LAGO ACCESSORI IS FORBIDDEN

E57*73R01/02*0010*01

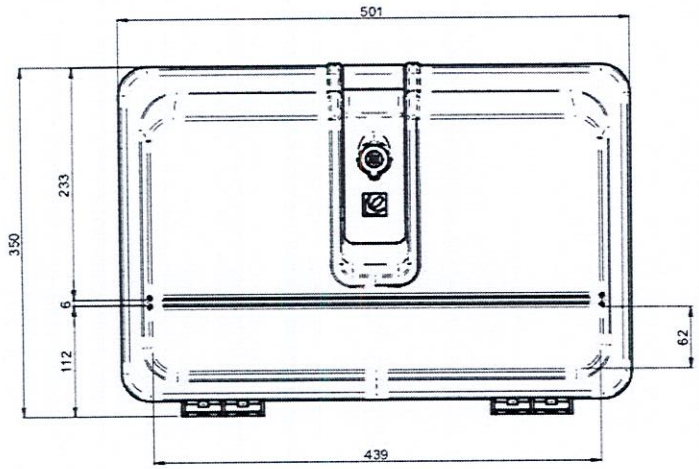

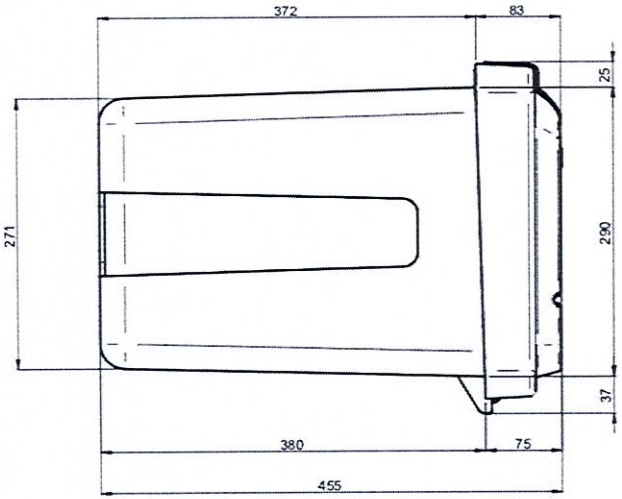

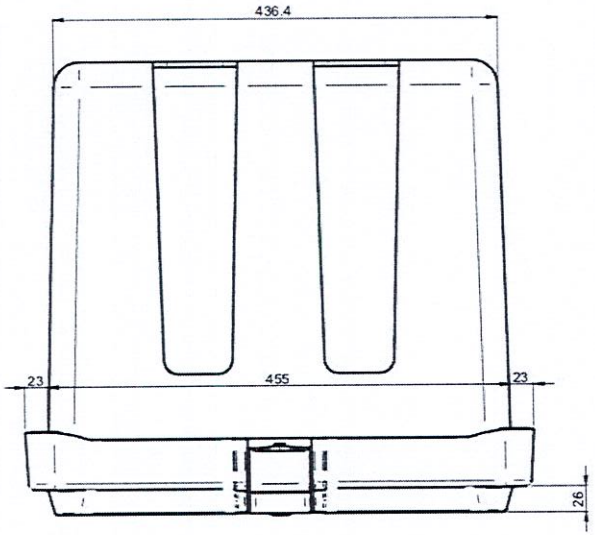

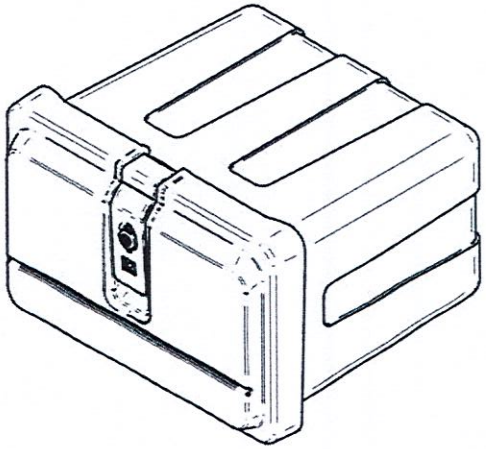

ACCURACY LINEAR DIMENSIONS							
to 6	±0.1	from 6 to 30	±0.2	from 30 to 120	±0.3	from 120 to 315	±0.5
from 315 to 1000	±0.8	from 1000 to 2000	±1.2	from 2000 to 4000	±2.0	from 4000	±3.0
ANGULAR DIMENSIONS							
from 0	±1°	to 6 from 30	±30'	from 30 to 120	±20'	from 120	±10'

REVIEW				
N°2	DATE	DESCRIPTION		DRAFTSMAN
N°1	DATE	DESCRIPTION		DRAFTSMAN
MATERIAL: Polypropylene		TREATMENT: -		DRAFTSMAN: Marco Simion

LAGO

Lago Accessori srl
via 1°Maggio 20, 35014 Fontaniva (Pd) Italy
Tel.: +39 049 5940932 Fax: +39 049 5940599
www.lagoaccessori.net info@lagoaccessori.net

SCALE	1 : 5
SHEET	1/1
CREATION DATE	25/05/2020
SET	
DRAWING CODE	44 60 62 100
DESCRIPTION	500 MOTHER TRUCKER
DESCRIPTION OF FINISHED PRODUCT	

LAGO ACCESSORI COPYRIGHT. ANY RIPRODUCTION WITHOUT WRITTEN PERMISSION OF LAGO ACCESSORI IS FORBIDDEN

E57*73R01/02*0010*01

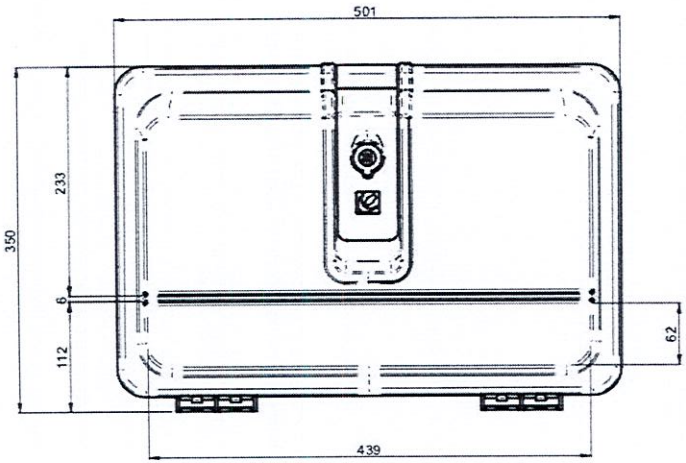

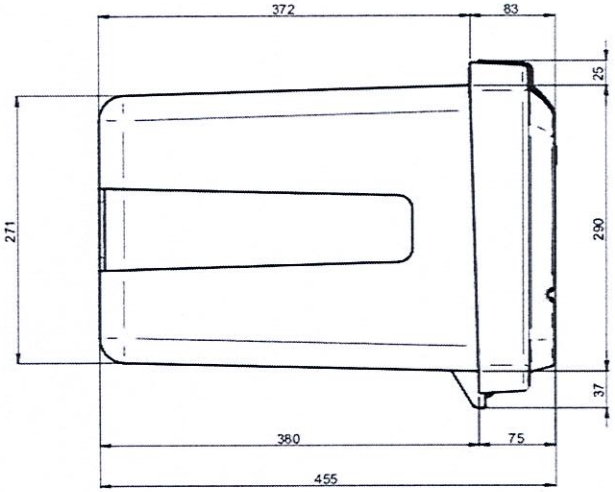

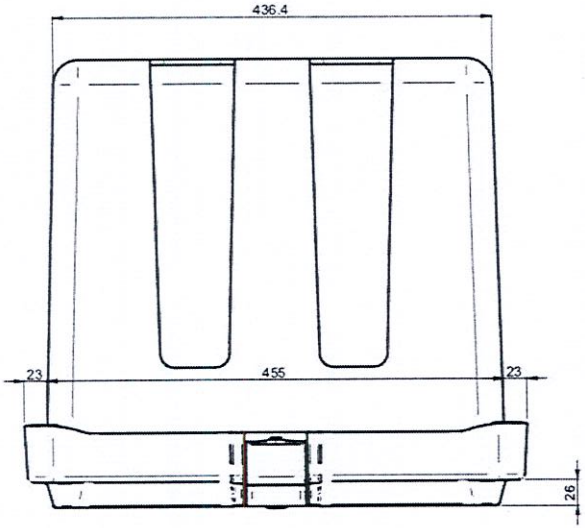

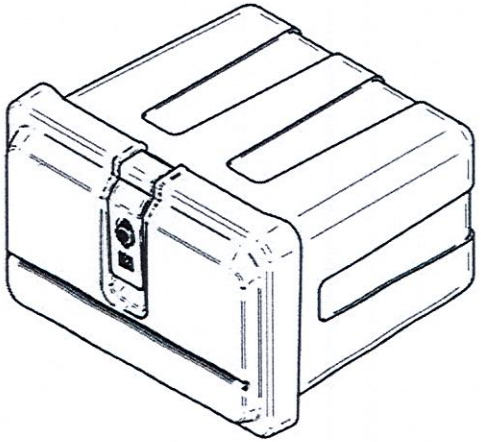

ACCURACY LINEAR DIMENSIONS							
to 6	±0.1	from 6 to 30	±0.2	from 30 to 120	±0.3	from 120 to 315	±0.5
from 315 to 1000	±0.8	from 1000 to 2000	±1.2	from 2000 to 4000	±2.0	from 4000	±3.0
ANGULAR DIMENSIONS							
from 6	±1°	to 6 from 30	±30'	from 30 to 120	±20'	from 120	±10'

REVIEW			
N°2	DATE	DESCRIPTION	DRAFTSMAN
N°1	DATE	DESCRIPTION	DRAFTSMAN

MATERIAL	TREATMENT	DRAFTSMAN
Polypropylene		Marco Simion

LAGO

Lago Accessori srl
via 1°Maggio 20, 35014 Fontaniva (Pd) Italy
Tel.: +39 049 5940932 Fax: +39 049 5940599
www.lagoaccessori.net info@lagoaccessori.net

CREATION DATE	SCALE	SHEET
25/05/2020	1 : 5	1/1

SET

DRAWING CODE
44 60 62 100

DESCRIPTION
500 MOTHER TRUCKER

DESCRIPTION OF FINISHED PRODUCT

LAGO ACCESSORI COPYRIGHT. ANY RIPRODUCTION WITHOUT WRITTEN PERMISSION OF LAGO ACCESSORI IS FORBIDDEN

E57*73R01/02*0010*01

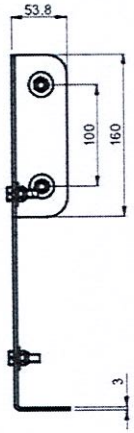

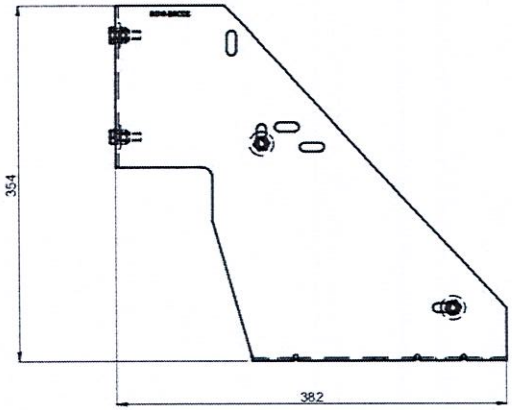

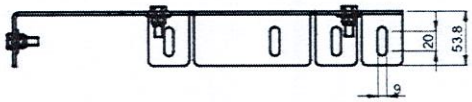

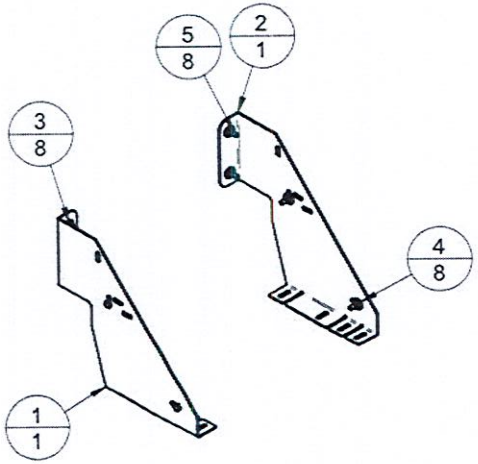

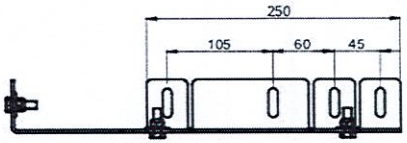

POS.	CODE	DESCRIPTION	Q.TY
	311632000	KIT SUPP.UNIV. NERO T15 TEL.4/500 S/PROF	
1	321634017	SUPP.NERO TELAIO SX CASS.4/5/750 TPL15	1
2	321634016	SUPP.NERO TELAIO DX CASS.4/5/750 TPL15	1
3	081102004	DADO M8 AUTOBLOCCANTE	8
4	081103005	RONDELLA UNI 6593 M8X24 ZN	8
5	081101038	VITE M8X25 TE	8

ACCURACY
LINEAR DIMENSIONS

to 6	±0.1	from 6 to 30	±0.2	from 30 to 120	±0.3	from 120 to 315	±0.5
from 315 to 1000	±0.8	from 1000 to 2000	±1.2	from 2000 to 4000	±2.0	from 4000	±3.0

ANGULAR DIMENSIONS

from 6	±1°	to 4 from 30	±30'	from 30 to 120	±20'	from 120	±10'

REVIEW	DATE	DESCRIPTION	DRAFTSMAN
N°2			
N°1			

MATERIAL	TREATMENT	DRAFTSMAN
S235JR	BLACK PAINT	Marco Simion

LAGO
Lago Accessori srl
via 1°Maggio 20, 35014 Fontaniva (Pd) Italy
Tel.: +39 049 5940932 Fax: +39 049 5940599
www.lagoaccessori.net info@lagoaccessori.net

SCALE 1 : 5
SHEET 1/1

CREATION DATE 27/05/2020

SET

DRAWING CODE 311632000.asm

DESCRIPTION KIT SUPP.UNIV. NERO T15 TEL.4/500 S/PROF

DESCRIPTION OF FINISHED PRODUCT

LAGO ACCESSORI COPYRIGHT. ANY RIPRODUCTION WITHOUT WRITTEN PERMISSION OF LAGO ACCESSORI IS FORBIDDEN.

E57*73R01/02*0010*01

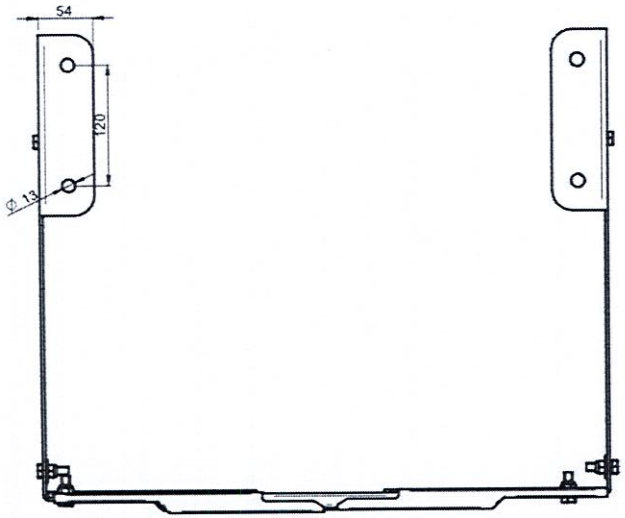

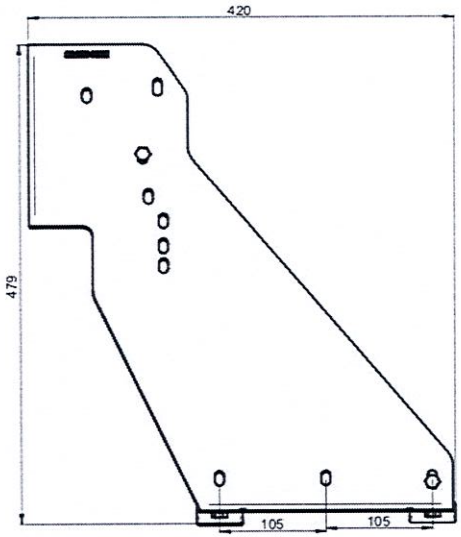

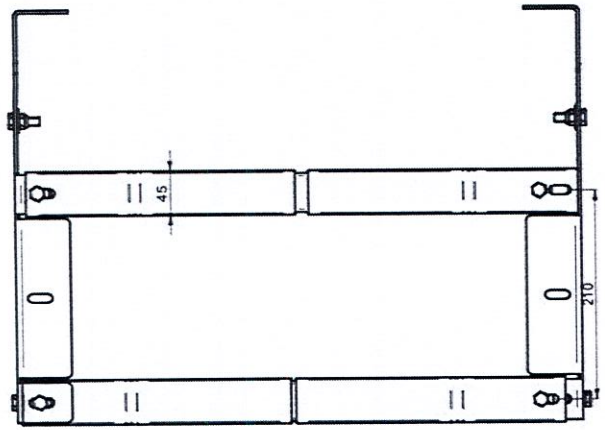

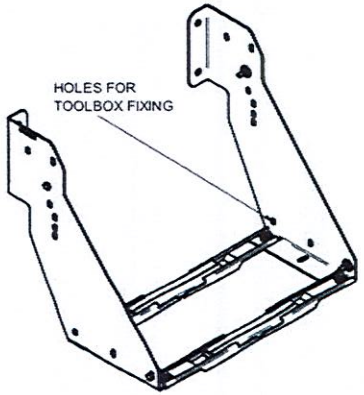

ACCURACY LINEAR DIMENSIONS							
to 6	±0.1	from 6 to 30	±0.2	from 30 to 120	±0.3	from 120 to 315	±0.5
from 315 to 1000	±0.8	from 1000 to 2000	±1.2	from 2000 to 4000	±2.0	from 4000	±3.0
ANGULAR DIMENSIONS							
from 6	±1°	to 6 from 30	±30'	from 30 to 120	±20'	from 120	±10'

REVIEW		DATE	DESCRIPTION	DRAFTSMAN
	N°2			
	N°1			

MATERIAL	TREATMENT	DRAFTSMAN
S2353JO	Black Paint	Marco Simion

LAGO

Lago Accessori srl
via 1°Maggio 20, 35014 Fontaniva (Pd) Italy
Tel: +39 049 5940932 Fax: +39 049 5940599
www.lagoaccessori.net info@lagoaccessori.net

CREATION DATE	SET
28/05/2020	
SCALE 1 : 5	DRAWING CODE 311633030.asm
SHEET 1/2	DESCRIPTION KIT SUPP.SPT NERO T15 TEL.600
	DESCRIPTION OF FINISHED PRODUCT

LAGO ACCESSORI COPYRIGHT. ANY RIPRODUCTION WITHOUT WRITTEN PERMISSION OF LAGO ACCESSORI IS FORBIDDEN

E57*73R01/02*0010*01

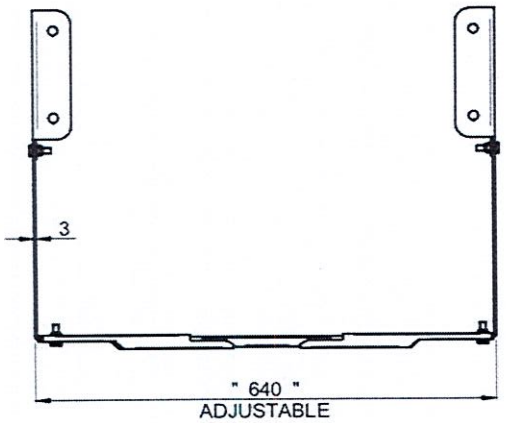

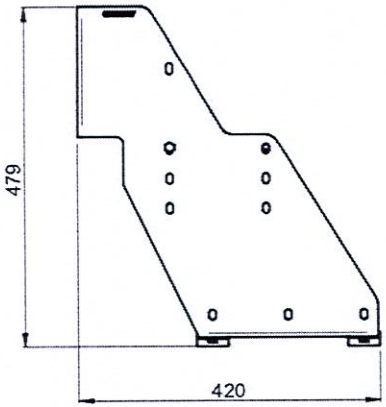

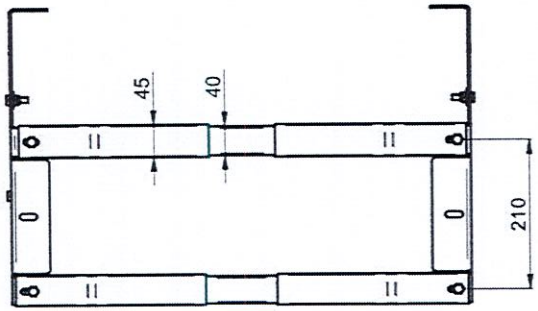

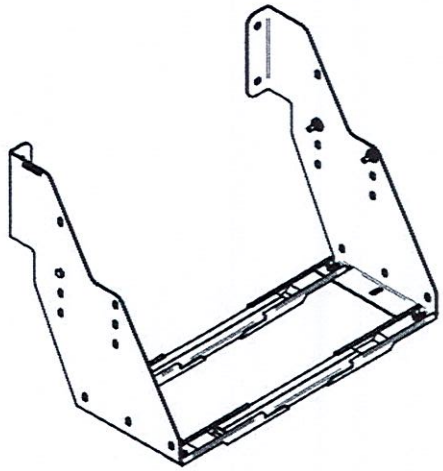

ACCURACY LINEAR DIMENSIONS							
to 6	±0.1	from 6 to 30	±0.2	from 30 to 120	±0.3	from 120 to 315	±0.5
from 315 to 1000	±0.8	from 1000 to 2000	±1.2	from 2000 to 4000	±2.0	from 4000	±3.0

REVIEW				
N°2	DATE .	DESCRIPTION .		DRAFTSMAN
N°1	DATE .	DESCRIPTION .		DRAFTSMAN

MATERIAL	TREATMENT	DRAFTSMAN
S235JO	BLACK PAINT	Marco Simion

LAGO
Lago Accessori srl
via 1°Maggio 20, 35014 Fontaniva (Pd) Italy
Tel: +39 049 5940932 Fax: +39 049 5940599
www.lagoaccessori.net info@lagoaccessori.net

SCALE	CREATION DATE	SET
1 : 10	27/05/2020	
SHEET 1/2		DRAWING CODE 311668040.asm
		DESCRIPTION KIT SUPP. DAY/T MOT/T NERO TEL.700
		CODE AND DESCRIPTION OF FINISHED PRODUCT

LAGO ACCESSORI COPYRIGHT. ANY RIPRODUCTION WITHOUT WRITTEN PERMISSION OF LAGO ACCESSORI IS FORBIDDEN

E57*73R01/02*0010*01

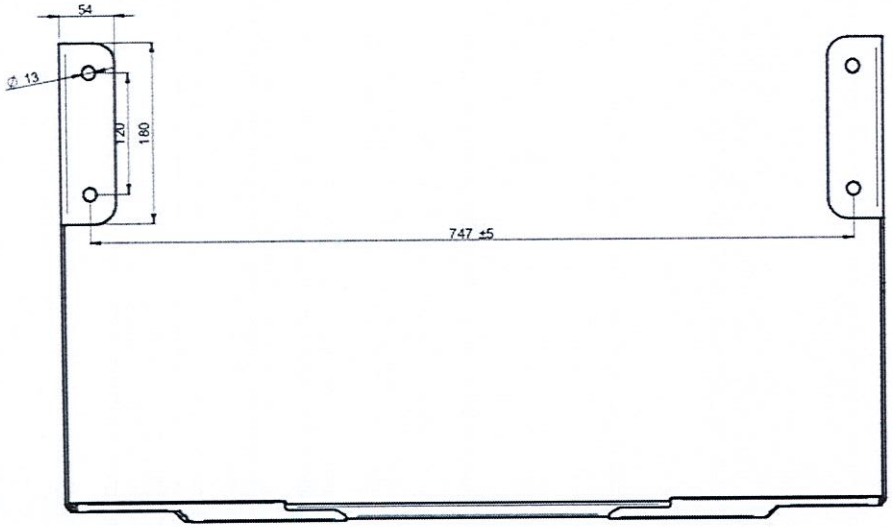

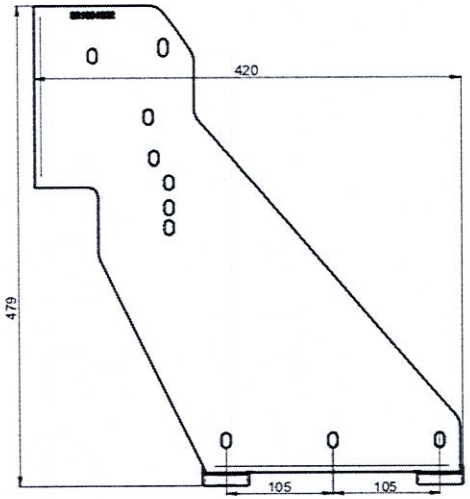

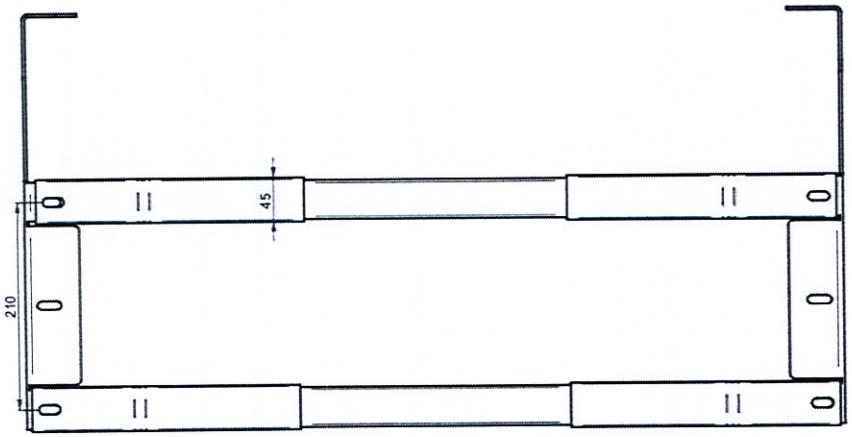

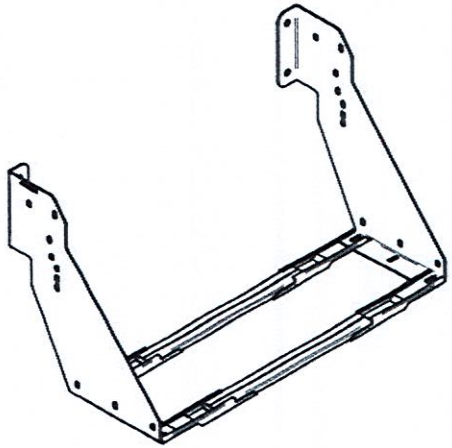

ACCURACY LINEAR DIMENSIONS											
to 6	±0.1	from 6 to 30	±0.2	from 30 to 120	±0.3	from 120 to 315	±0.5	REVIEW	N°2	DATE	DESCRIPTION	DRAFTSMAN
from 315 to 1000	±0.8	from 1000 to 2000	±1.2	from 2000 to 4000	±2.0	from 4000	±3.0		N°1	DATE	DESCRIPTION	DRAFTSMAN

ANGULAR DIMENSIONS							
from 6	±1°	to 6 from 30	±30'	from 30 to 120	±20'	from 120	±10'

MATERIAL S235JO	TREATMENT BLACK PAINT	DRAFTSMAN Marco Simion	
CREATION DATE 28/05/2020	SCALE 1 : 5	SET	
		DRAWING CODE 311633050.asm	
	SHEET 1/2	DESCRIPTION KIT SUPP.SPT NERO T15 TEL.800	
		DESCRIPTION OF FINISHED PRODUCT	

LAGO
Lago Accessori srl
via 1°Maggio 20, 35014 Fontaniva (Pd) Italy
Tel: +39 049 5940932 Fax: +39 049 5940599
www.lagoaccessori.net info@lagoaccessori.net

LAGO ACCESSORI COPYRIGHT. ANY RIPRODUCTION WITHOUT WRITTEN PERMISSION OF LAGO ACCESSORI IS FORBIDDEN

E57*73R01/02*0010*01

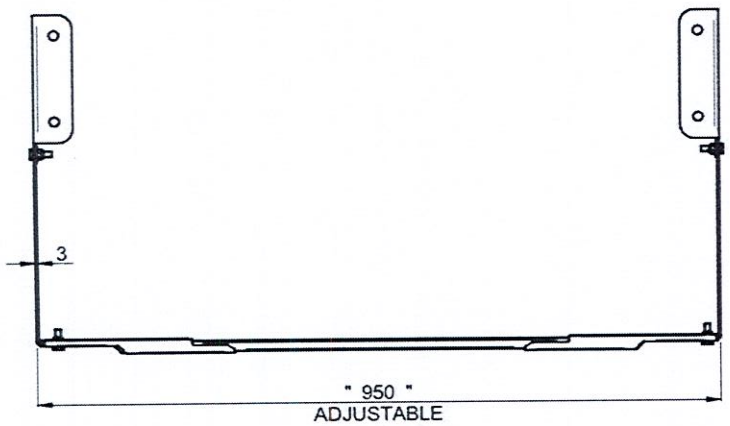

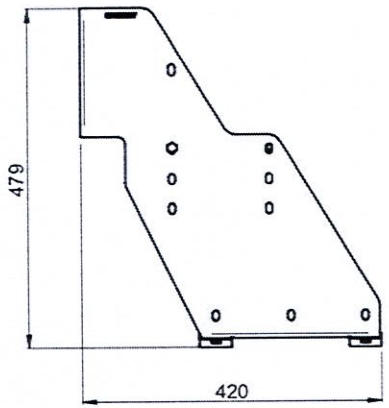

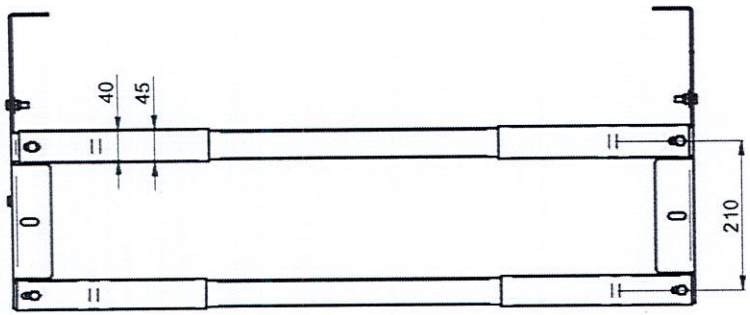

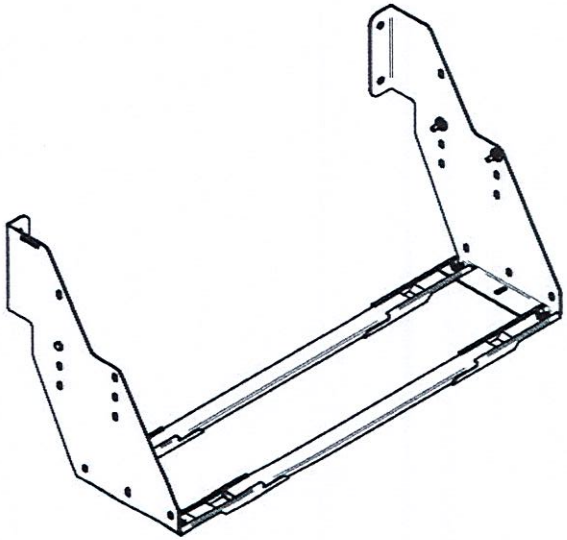

ACCURACY LINEAR DIMENSIONS							
to 6	±0.1	from 6 to 30	±0.2	from 30 to 120	±0.3	from 120 to 315	±0.5
from 315 to 1000	±0.8	from 1000 to 2000	±1.2	from 2000 to 4000	±2.0	from 4000	±3.0

REVIEW		DATE	DESCRIPTION	DRAFTSMAN
	N°2	-	-	
	N°1	-	-	

MATERIAL	TREATMENT	DRAFTSMAN
S235JO	BLACK PAINT	Marco Simion

LAGO
Lago Accessori srl
via 1°Maggio 20, 35014 Fontaniva (Pd) Italy
Tel: +39 049 5940932 Fax: +39 049 5940599
www.lagoaccessori.net info@lagoaccessori.net

SCALE	CREATION DATE	SET
1 : 10	28/05/2020	
SHEET 1/2		DRAWING CODE 311668060.asm
		DESCRIPTION KIT SUPP. DAY/T MOT/T NERO TEL.1000
		CODE AND DESCRIPTION OF FINISHED PRODUCT

LAGO ACCESSORI COPYRIGHT. ANY RIPRODUCTION WITHOUT WRITTEN PERMISSION OF LAGO ACCESSORI IS FORBIDDEN

E57*73R01/02*0010*01

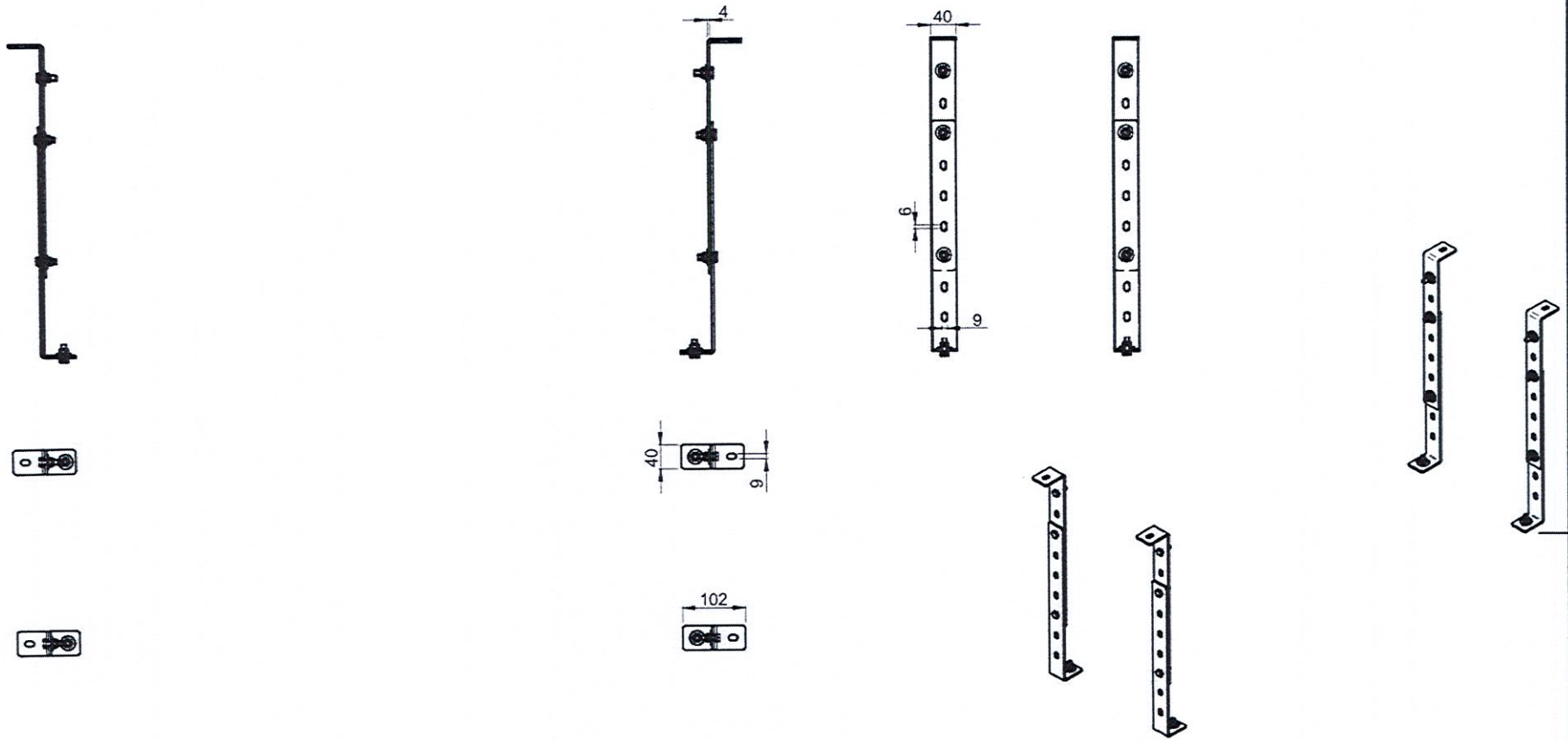

ACCURACY			
LINEAR DIMENSIONS			
to 6 ±0.1	from 6 to 30 ±0.2	from 30 to 120 ±0.3	from 120 to 315 ±0.5
from 315 to 1000 ±0.8	from 1000 to 2000 ±1.2	from 2000 to 4000 ±2.0	from 4000 ±3.0
ANGULAR DIMENSIONS			
from 6 ±1°	to 6 from 30 ±30'	from 30 to 120 ±20'	from 120 ±10'

REVIEW			
N°2	DATE -	DESCRIPTION -	DRAFTSMAN
N°1	DATE -	DESCRIPTION -	DRAFTSMAN

MATERIAL	TREATMENT	DRAFTSMAN
S235JR	Black Paint	Marco Simion

LAGO
Lago Accessori srl
via 1°Maggio 20, 35014 Fontaniva (Pd) Italy
Tel: +39 049 5940932 Fax: +39 049 5940599
www.lagoaccessori.net info@lagoaccessori.net

SCALE	CREATION DATE	SET
1 : 10	28/05/2020	
SHEET 1/2		DRAWING CODE 311641000.asm
		DESCRIPTION KIT SUP.UNIV NERO T15REG PIAN.4/500 S/PR
		CODE AND DESCRIPTION OF FINISHED PRODUCT

LAGO ACCESSORI COPYRIGHT. ANY RIPRODUCTION WITHOUT WRITTEN PERMISSION OF LAGO ACCESSORI IS FORBIDDEN

E57*73R01/02*0010*01

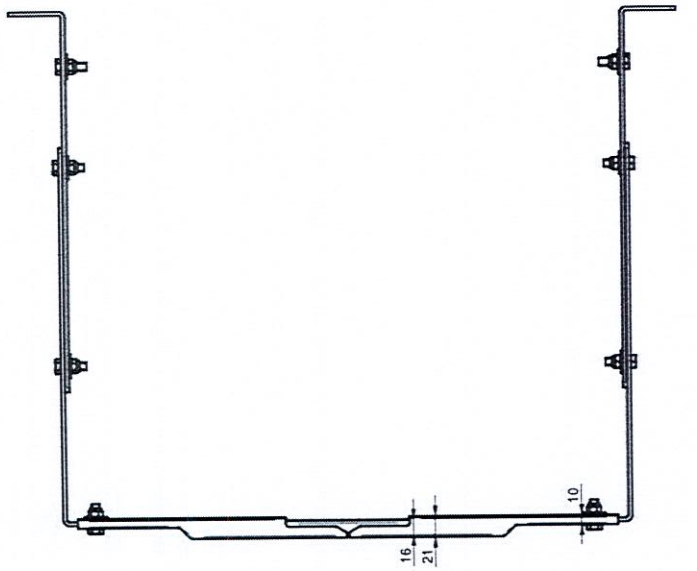

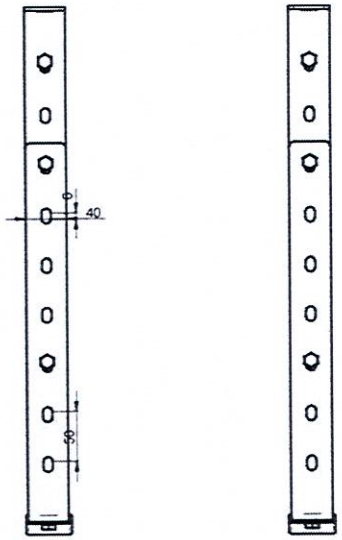

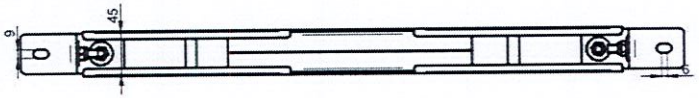

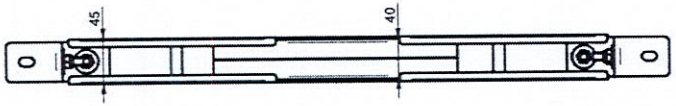

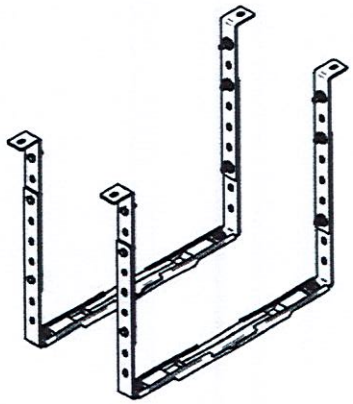

ACCURACY LINEAR DIMENSIONS							
to 6	±0.1	from 6 to 30	±0.2	from 30 to 120	±0.3	from 120 to 315	±0.5
from 315 to 1000	±0.8	from 1000 to 2000	±1.2	from 2000 to 4000	±2.0	from 4000	±3.0
ANGULAR DIMENSIONS							
from 6	±1°	to 6 from 30	±30'	from 30 to 120	±20'	from 120	±10'

REVIEW				
N°2	DATE	DESCRIPTION		DRAFTSMAN
N°1	DATE	DESCRIPTION		DRAFTSMAN

MATERIAL	TREATMENT	DRAFTSMAN
S235JO	.	Marco Simion

LAGO

Lago Accessori srl
via 1°Maggio 20, 35014 Fontaniva (Pd) Italy
Tel.: +39 049 5940932 Fax: +39 049 5940599
www.lagoaccessori.net info@lagoaccessori.net

SCALE	CREATION DATE	SET
1 : 5	28/05/2020	
SHEET 1/2		DRAWING CODE 311642030.asm
		DESCRIPTION KIT SUP. SPT NERO T15REG PIAN.600
		CODE AND DESCRIPTION OF FINISHED PRODUCT

LAGO ACCESSORI COPYRIGHT. ANY RIPRODUCTION WITHOUT WRITTEN PERMISSION OF LAGO ACCESSORI IS FORBIDDEN.

E57*73R01/02*0010*01

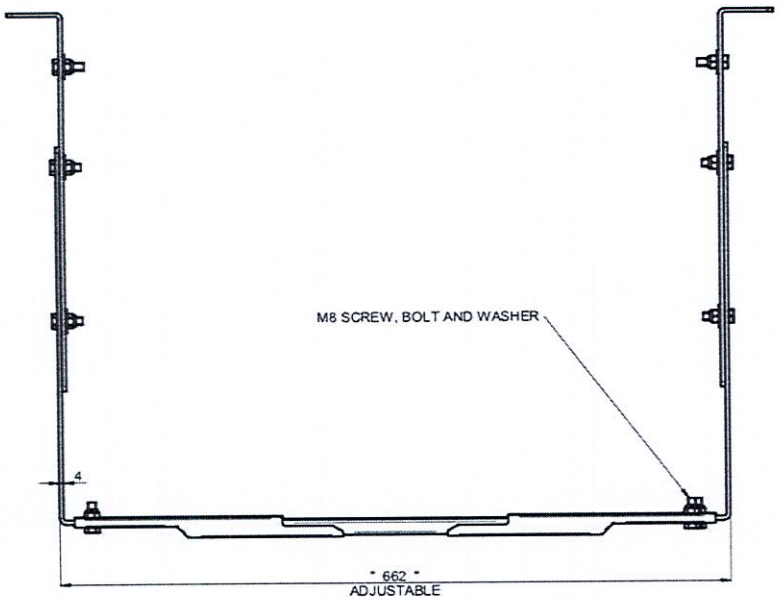

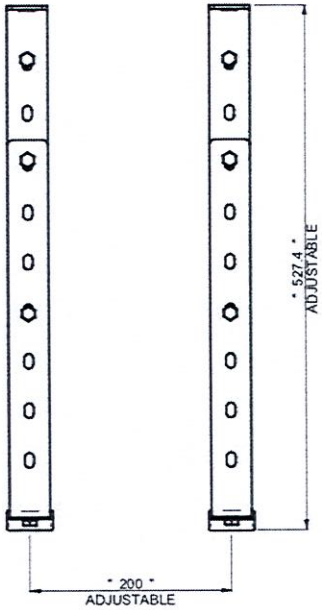

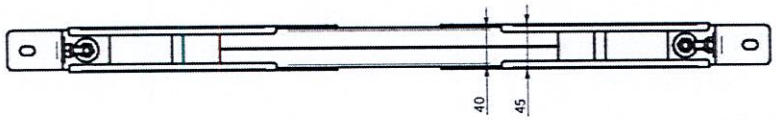

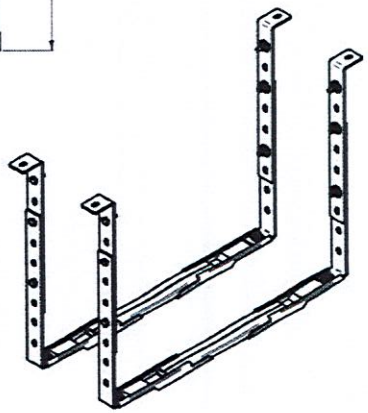

ACCURACY							
LINEAR DIMENSIONS							
to 6	±0.1	from 6 to 30	±0.2	from 30 to 120	±0.3	from 120 to 315	±0.5
from 315 to 1000	±0.8	from 1000 to 2000	±1.2	from 2000 to 4000	±2.0	from 4000	±3.0
ANGULAR DIMENSIONS							
from 0	±1°	to 6 from 30	±30'	from 30 to 120	±20'	from 120	±10'

REVIEW				
N°2	DATE	DESCRIPTION		DRAFTSMAN
N°1	DATE	DESCRIPTION		DRAFTSMAN
MATERIAL S235JO		TREATMENT BLACK PAINT		DRAFTSMAN Marco Simion

LAGO

Lago Accessori srl
via 1°Maggio 20, 35014 Fontaniva (Pd) Italy
Tel.: +39 049 5940932 Fax: +39 049 5940599
www.lagoaccessori.net info@lagoaccessori.net

CREATION DATE 28/05/2020	SET	
SCALE 1 : 5	DRAWING CODE 311669040.asm	
SHEET 1/2	DESCRIPTION KIT SUPP. DAY/T MOT/T NERO PIAN.700	
	CODE AND DESCRIPTION OF FINISHED PRODUCT	

LAGO ACCESSORI COPYRIGHT. ANY RIPRODUCTION WITHOUT WRITTEN PERMISSION OF LAGO ACCESSORI IS FORBIDDEN

E57*73R01/02*0010*01

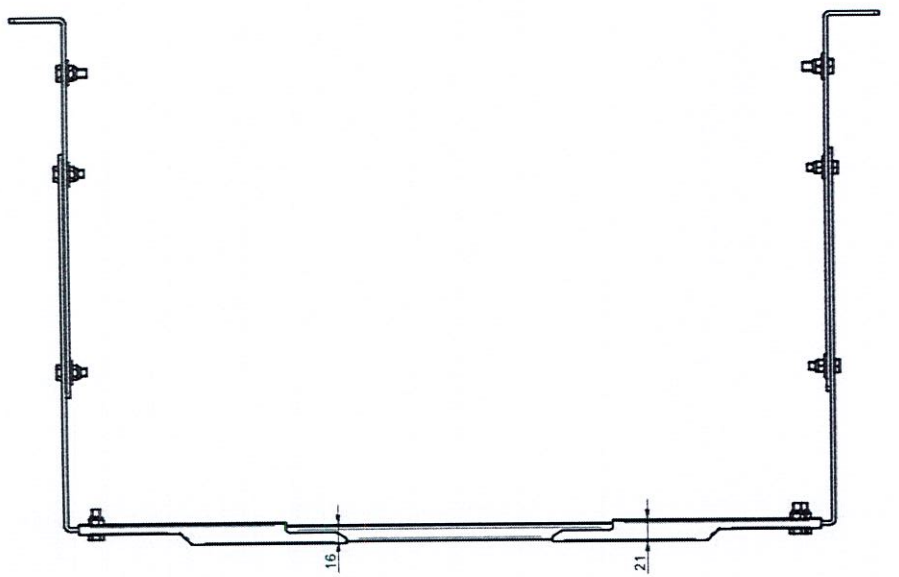

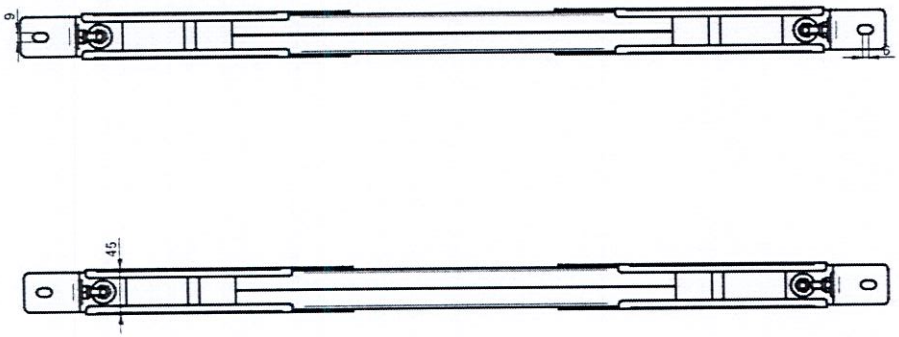

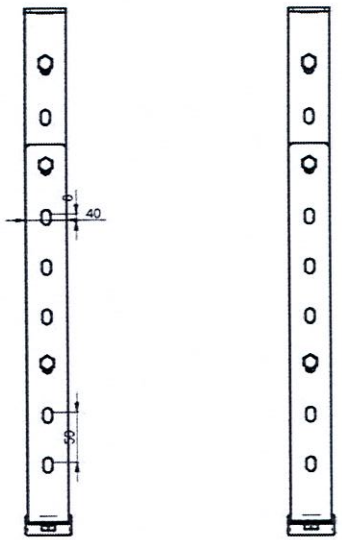

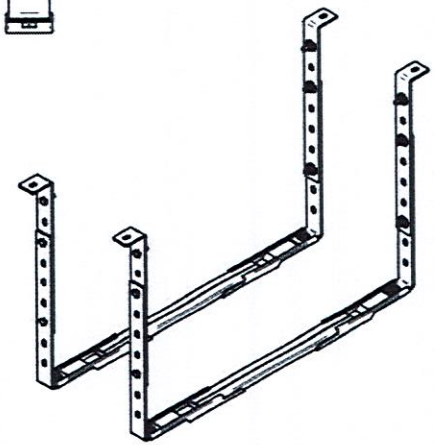

ACCURACY LINEAR DIMENSIONS											
to 6	±0.1	from 6 to 30	±0.2	from 30 to 120	±0.3	from 120 to 315	±0.5	REVIEW N°2	DATE	DESCRIPTION	DRAFTSMAN
from 315 to 1000	±0.8	from 1000 to 2000	±1.2	from 2000 to 4000	±2.0	from 4000	±3.0	REVIEW N°1	DATE	DESCRIPTION	DRAFTSMAN
ANGULAR DIMENSIONS								MATERIAL S235JO		TREATMENT BLACK PAINT	DRAFTSMAN Marco Simion
from 6	±1°	to 6 from 30	±30'	from 30 to 120	±20'	from 120	±10'	CREATION DATE 28/05/2020		SET	

LAGO

Lago Accessori srl
via 1°Maggio 20, 35014 Fontaniva (Pd) Italy
Tel.: +39 049 5940932 Fax: +39 049 5940599
www.lagoaccessori.net info@lagoaccessori.net

SCALE 1 : 5

SHEET 1/2

CREATION DATE 28/05/2020

SET

DRAWING CODE 311642050.asm

DESCRIPTION KIT SUP. SPT NERO T15REG PIAN.800

CODE AND DESCRIPTION OF FINISHED PRODUCT

LAGO ACCESSORI COPYRIGHT. ANY RIPRODUCTION WITHOUT WRITTEN PERMISSION OF LAGO ACCESSORI IS FORBIDDEN

E57*73R01/02*0010*01

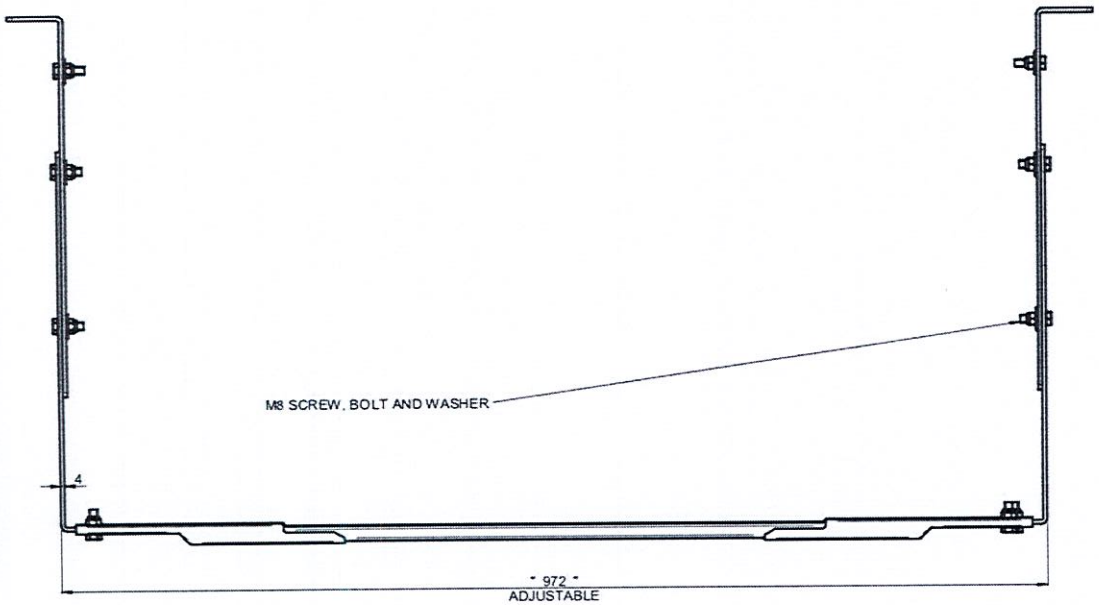

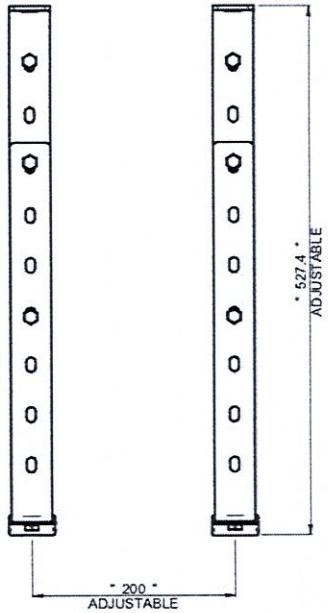

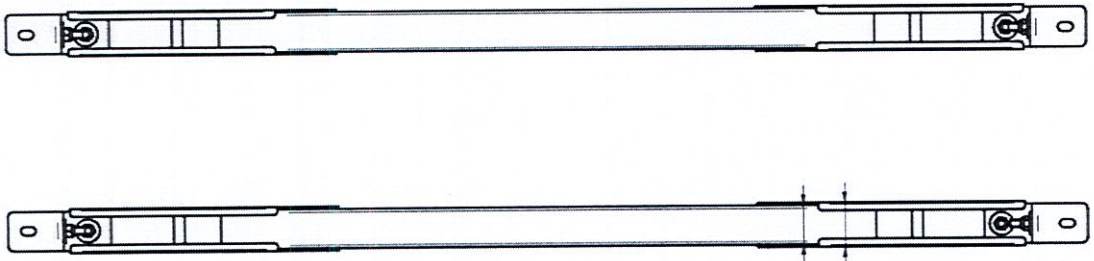

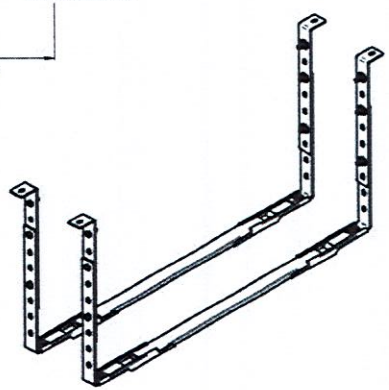

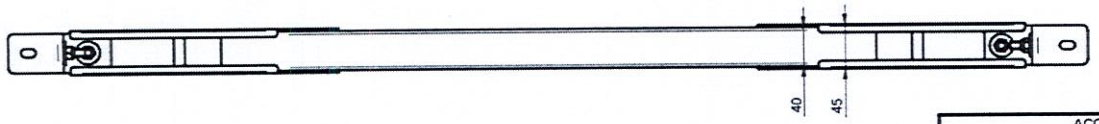

ACCURACY LINEAR DIMENSIONS							
to 6	±0.1	from 6 to 30	±0.2	from 30 to 120	±0.3	from 120 to 315	±0.5
from 315 to 1000	±0.8	from 1000 to 2000	±1.2	from 2000 to 4000	±2.0	from 4000	±3.0
ANGULAR DIMENSIONS							
from 6	±1°	to 6 from 30	±30'	from 30 to 120	±20'	from 120	±10'

REVIEW		DATE	DESCRIPTION	DRAFTSMAN
	N°2			
	N°1			

MATERIAL	TREATMENT	DRAFTSMAN
S235JO	BLACK PAINT	Marco Simion

LAGO

Lago Accessori srl
via 1°Maggio 20, 35014 Fontaniva (Pd) Italy
Tel.: +39 049 5940932 Fax: +39 049 5940599
www.lagoaccessori.net info@lagoaccessori.net

CREATION DATE	SET
28/05/2020	
SCALE 1 : 5	DRAWING CODE 311669060.asm
SHEET 1/2	DESCRIPTION KIT SUPP. DAY/T MOT/T NERO PIAN.1000
	CODE AND DESCRIPTION OF FINISHED PRODUCT

LAGO ACCESSORI COPYRIGHT. ANY RIPRODUCTION WITHOUT WRITTEN PERMISSION OF LAGO ACCESSORI IS FORBIDDEN

E57*73R01/02*0010*01

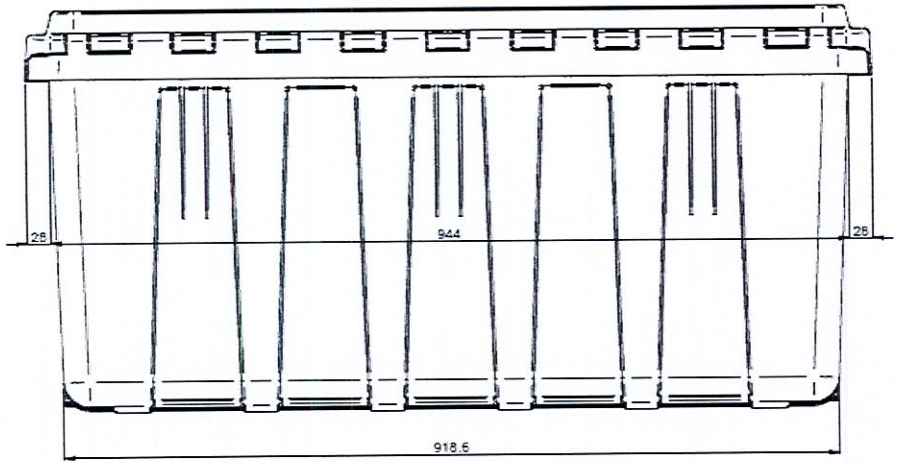
28
944
28
918.6

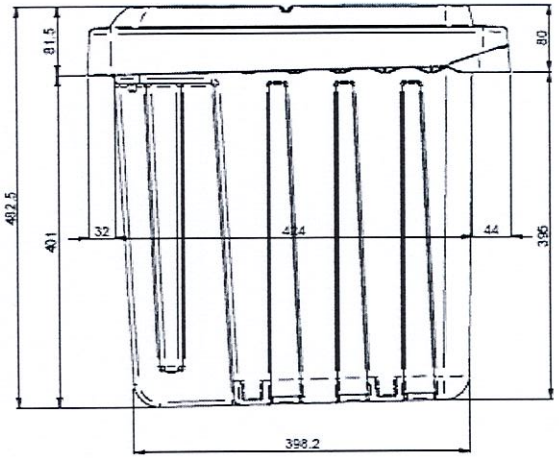
81.5
80
402.5
401
32
424
44
396
398.2

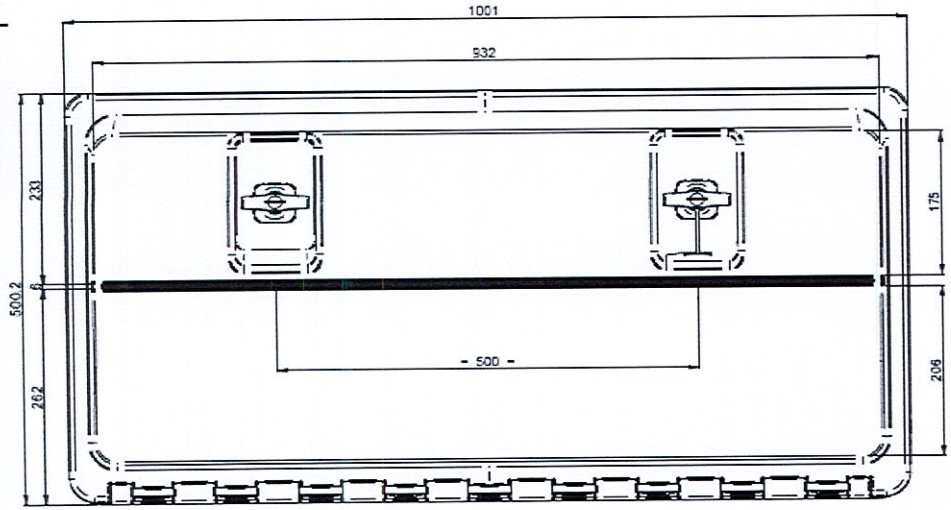
1001
932
233
175
500.2
8
- 500 -
206
262

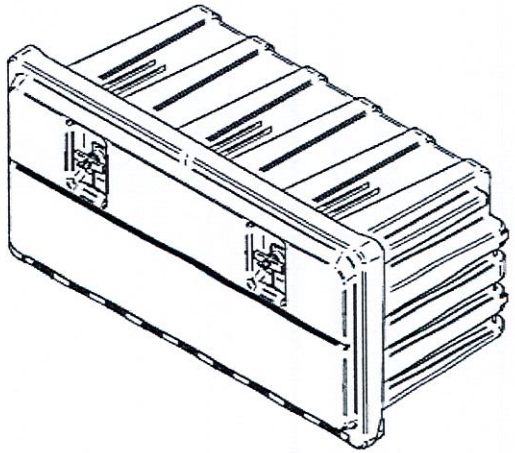

| ACCURACY | | |

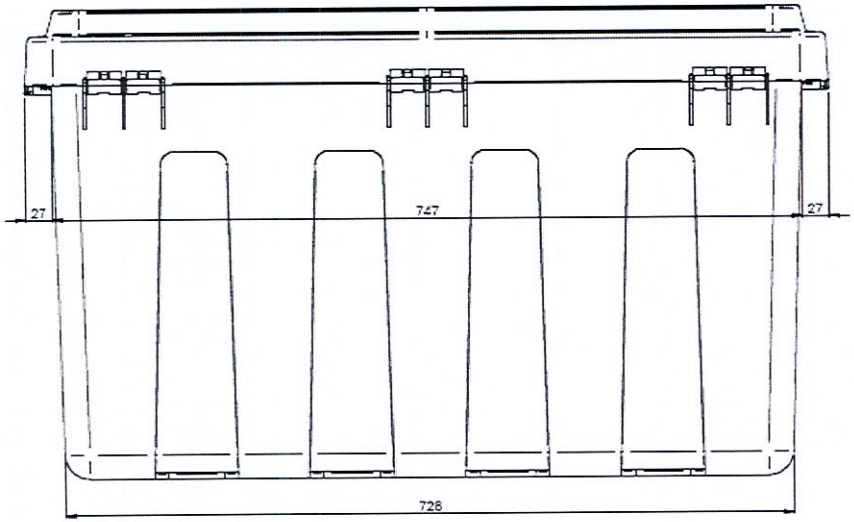
27
747
27
728

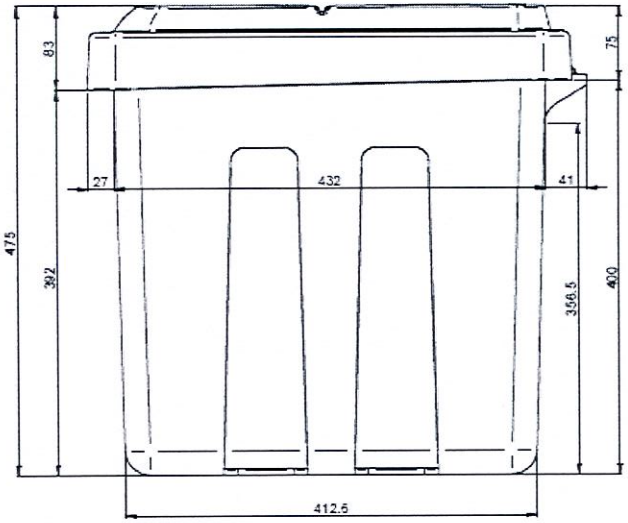
83
75
27
432
41
475
392
356.5
400
412.6

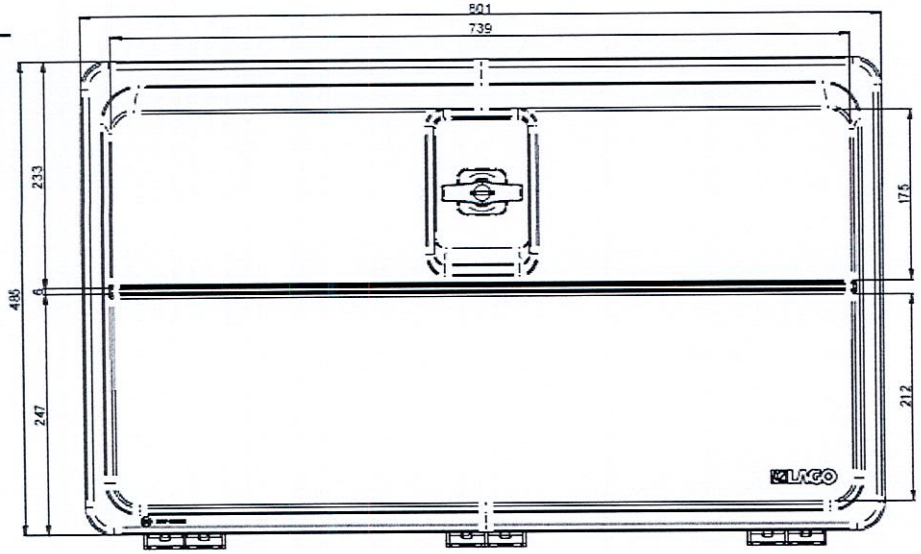
501
739
233
175
486
6
247
212
LAGO

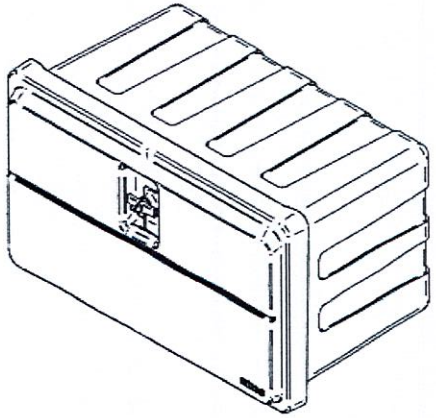

| ACCURACY | | |

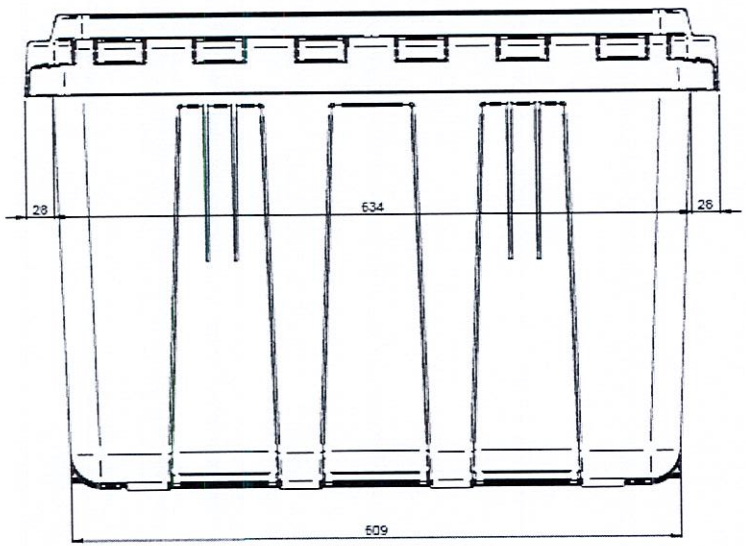

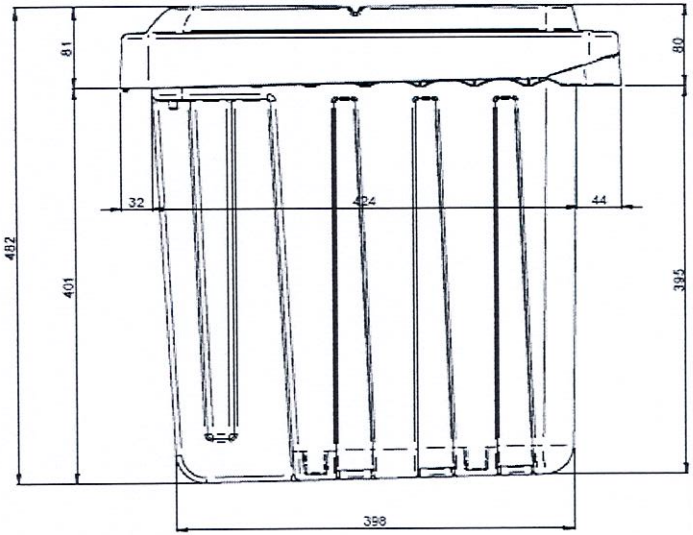

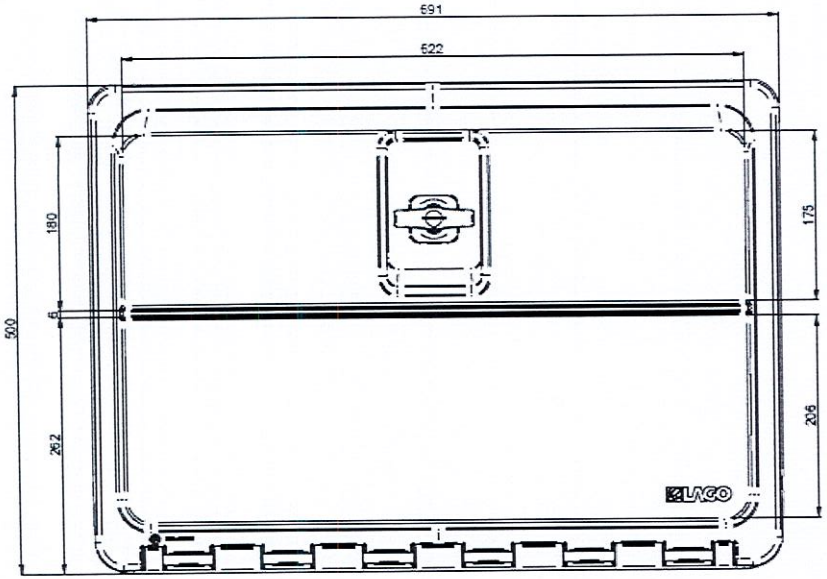

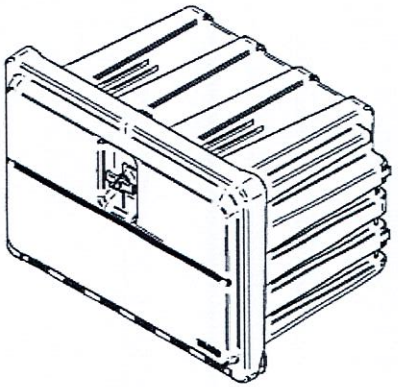

ACCURACY							
LINEAR DIMENSIONS							
to 6	±0.1	from 6 to 30	±0.2	from 30 to 120	±0.3	from 120 to 315	±0.5
from 315 to 1000	±0.8	from 1000 to 3000	±1.2	from 3000 to 4000	±2.0	from 4000	±3.0
ANGULAR DIMENSIONS							
from 6	±1°	to 6 from 30	±30'	from 30 to 120	±20'	from 120	±10'

REVIEW				
N°2	DATE	DESCRIPTION		DRAFTSMAN
N°1	DATE	DESCRIPTION		DRAFTSMAN

MATERIAL: Polypropylene	TREATMENT: -	DRAFTSMAN: Paolo Livio
CREATION DATE: 24/02/2022	SET	
SCALE: 1 : 1	DRAWING CODE: 446064045.asm	
SHEET: 2/2	DESCRIPTION: ORIGIN 700	
	DESCRIPTION OF FINISHED PRODUCT: 446064045	

LAGO
Lago Accessori srl
via 1°Maggio 20, 35014 Fontaniva (Pd) Italy
Tel: +39 049 5940932 Fax: +39 049 5940599
www.lagoaccessori.net info@lagoaccessori.net

LAGO ACCESSORI COPYRIGHT. ANY RIPRODUCTION WITHOUT WRITTEN PERMISSION OF LAGO ACCESSORI IS FORBIDDEN

E57*73R01/02*0010*01

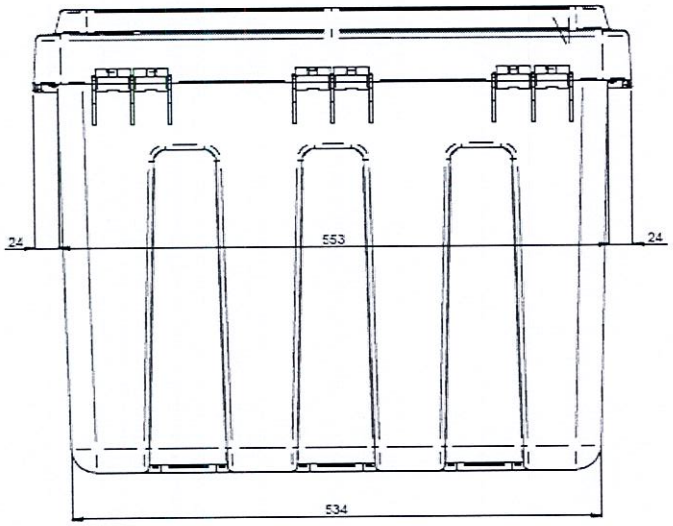
24
553
24
534

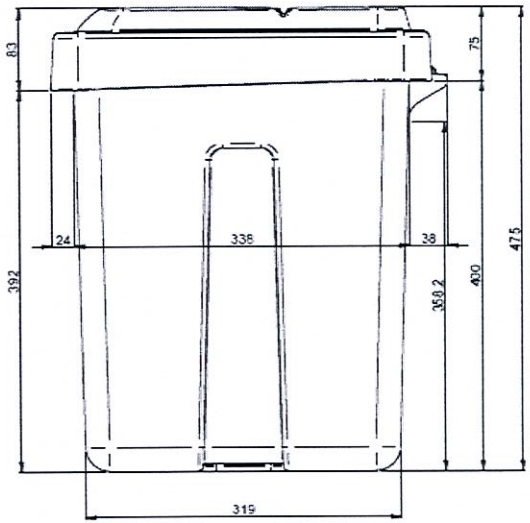
83
75
24
338
38
392
350.2
400
475
319

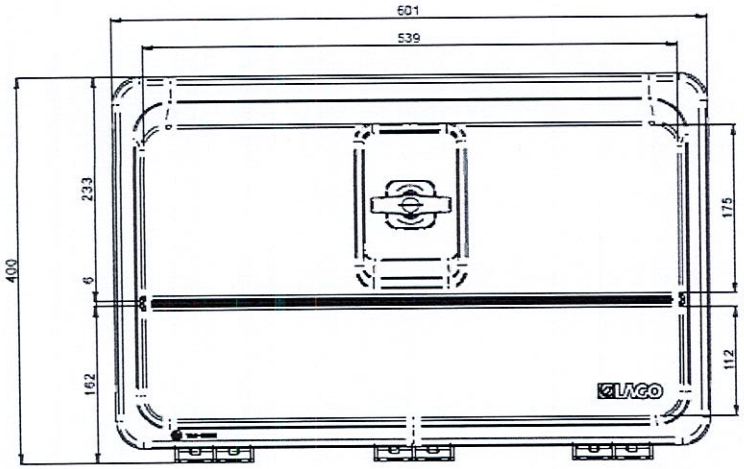
601
539
400
233
6
162
175
112
LAGO

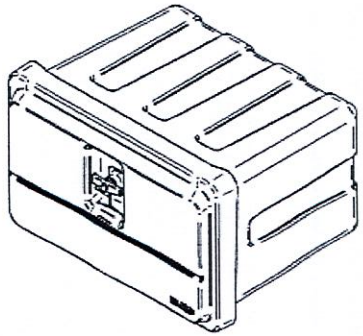

| ACCURACY | | |

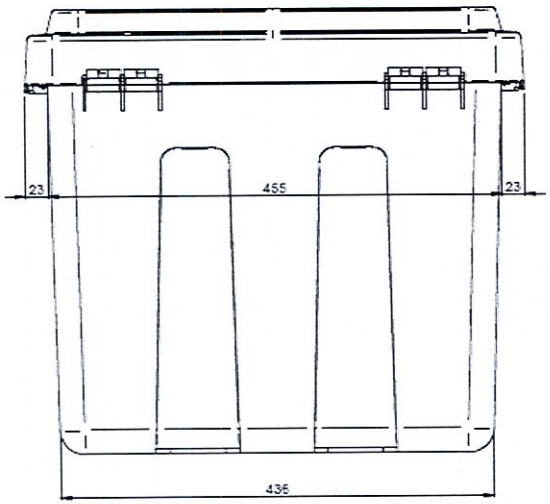
23
455
23
436

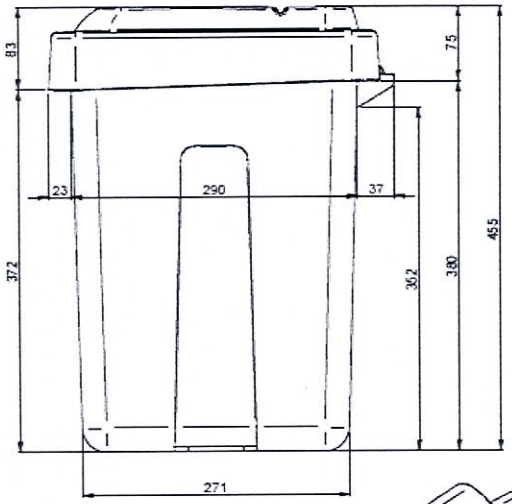
83
75
23
290
37
372
362
380
455
271

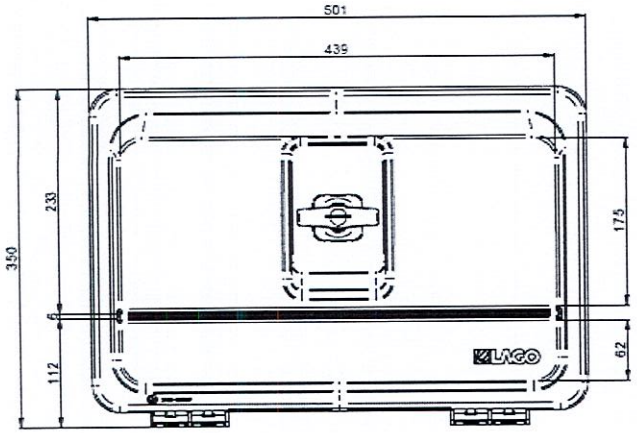
501
439
350
233
175
112
62
LAGO

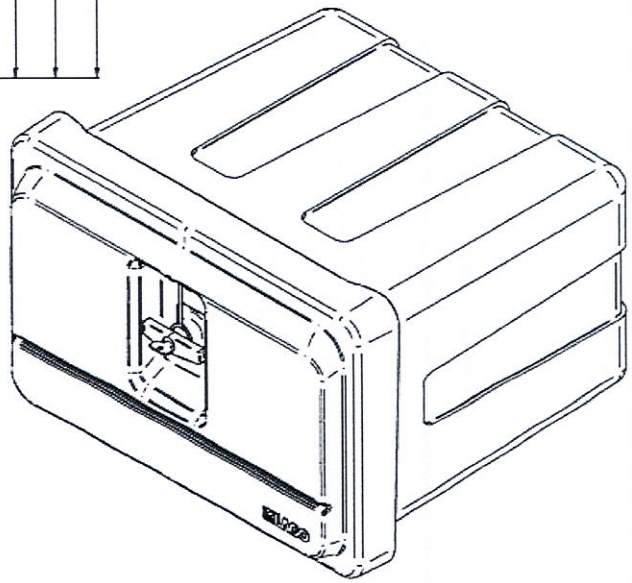
LAGO

| ACCURACY | | |

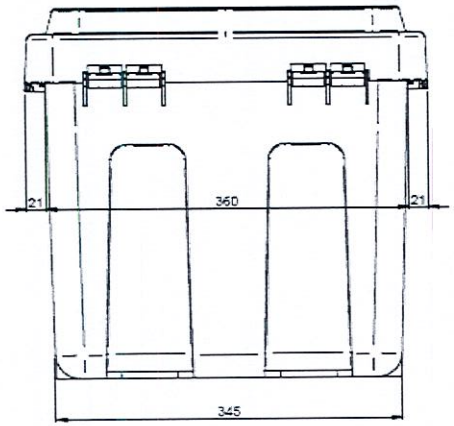

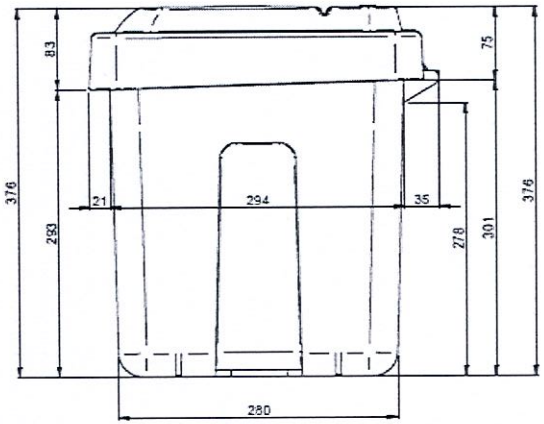

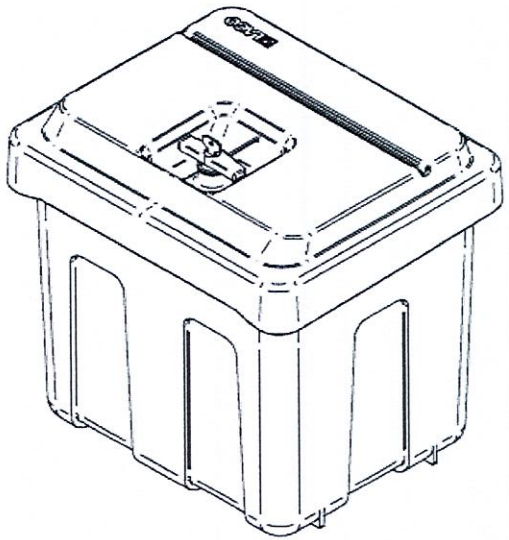

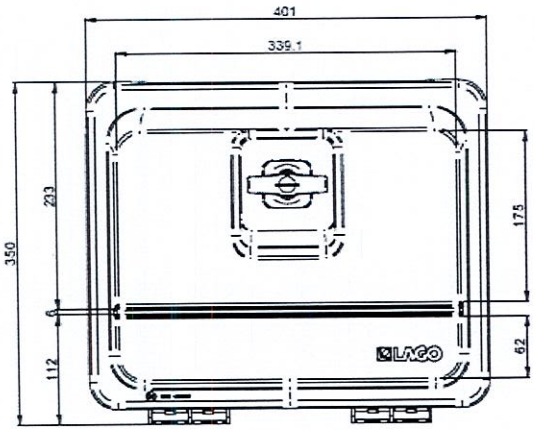

ACCURACY							
LINEAR DIMENSIONS							
to 6	±0.1	from 6 to 30	±0.2	from 30 to 120	±0.3	from 120 to 315	±0.5
from 315 to 1000	±0.8	from 1000 to 2000	±1.2	from 2000 to 4000	±2.0	from 4000	±3.0
ANGULAR DIMENSIONS							
from 0	±1°	to 6 from 30	±30'	from 30 to 120	±20'	from 120	±10'

REVIEW			
N°2	DATE	DESCRIPTION	DRAFTSMAN
N°1	DATE	DESCRIPTION	DRAFTSMAN

MATERIAL: Polypropylene	TREATMENT: .	DRAFTSMAN: Paolo Livio
CREATION DATE: 28/02/2022	SET	
SCALE: 1 : 1	DRAWING CODE: 446064116.asm	
SHEET: 2/2	DESCRIPTION: ORIGIN 400	
	DESCRIPTION OF FINISHED PRODUCT	446064116

LAGO
Lago Accessori srl
via 1°Maggio 20, 35014 Fontaniva (Pd) Italy
Tel: +39 049 5940932 Fax: +39 049 5940599
www.lagoaccessori.net info@lagoaccessori.net

LAGO ACCESSORI COPYRIGHT. ANY RIPRODUCTION WITHOUT WRITTEN PERMISSION OF LAGO ACCESSORI IS FORBIDDEN

E57*73R01/02*0010*01